FIKE EUROPE

MULTICORE DRAWING

EPACO MULTI STREAM - 4 STREAMS

TEL.: +32 14 21 00 31 **FAX.:** +32 14 21 07 43

COLOR CODE

BK: BLACK	RD: RED	YE/GR: YELLOW/GREEN	OG: ORANGE	GN: GREEN
WH: WHITE	BU: BLUE	BN: BROWN	VT: VIOLET	GY: GREY

CUSTOMER:	Don Valley Engineering
CABINET NR:	160737-3-3
SALES ORDER:	160737
FIKE CUST REF:	PO 0000032556

Project Number:			
Print Date:	4/6/2022		
Designed by:	Stefaan.Joris		
Revision:	-	**Revision date:**	-

Fike Europe E.v.b.a. · Toekomstlaan 52 · B2200 Herentals · Belgium
Tel. +32 14 210031 · Fax +32 14 210743
Email: fike-europe@fike.com · website: www.fike .be

Don Valley Engineering
160737
160737-3-3

Title page

File: 160737-3-3	*Drawingnr:* 160737-3-3	*Revision:* -	*Dwg. By:* Stefaan.Jo
Date: 4/6/2022	*Cabinet type:* EPACO MULTI STREAM - 4 STREAMS		Page: 1
			# Pages: 84

Table of contents

Column X: An automatically generated page was edited

F06_001

Page	Page description	supplementary page field	Date	Edited by	X
=CABINET3/1	Title page		8/22/2017	SJ	
=CABINET3/2	Table of contents		4/5/2022	Stefaan.Joris	
=CABINET3/2.a	Table of contents		4/5/2022	Stefaan.Joris	
=CABINET3/2.b	Table of contents		4/5/2022	Stefaan.Joris	
=CABINET3/3	Manuals Info Page		8/22/2017	SJ	X
=CABINET3/20	Layout cabinet		2/8/2018	SJ	
=CABINET3/21	Layout cabinet		2/8/2018	SJ	
=CABINET3/22	Enclosure legend		2/8/2018	SJ	
=CABINET3/22.a	Enclosure legend		2/8/2018	SJ	
=CABINET3/23	Enclosure legend		2/8/2018	SJ	
=CABINET3/24	Enclosure legend		2/8/2018	SJ	
=CABINET3/25	Enclosure legend		2/8/2018	SJ	
=CABINET3+POWER/310	Power in		2/8/2018	SJ	
=CABINET3+POWER/320	Power in		2/8/2018	SJ	
=CABINET3+POWER/330	Power in		2/8/2018	SJ	
=CABINET3+POWER/340	Power in		2/8/2018	SJ	
=CABINET3+STREAM1/310.a	Power Supply Unit 1		4/5/2022	Stefaan.Joris	
=CABINET3+STREAM1/311	Explosion Protection Controller 1		4/5/2022	Stefaan.Joris	
=CABINET3+STREAM1/311.a	Explosion Protection Controller 1		4/5/2022	Stefaan.Joris	
=CABINET3+STREAM1/311.b	Explosion Protection Controller 1		4/5/2022	Stefaan.Joris	
=CABINET3+STREAM1/312	Explosion Protection Controller 2		4/5/2022	Stefaan.Joris	
=CABINET3+STREAM1/312.b	Explosion Protection Controller 2		4/5/2022	Stefaan.Joris	
=CABINET3+STREAM1/313	Explosion Protection Controller 3		4/5/2022	Stefaan.Joris	
=CABINET3+STREAM1/313.a	Explosion Protection Controller 3		4/5/2022	Stefaan.Joris	
=CABINET3+STREAM1/313.b	Explosion Protection Controller 3		4/5/2022	Stefaan.Joris	
=CABINET3+STREAM1/314	Explosion Protection Controller 4		4/5/2022	Stefaan.Joris	
=CABINET3+STREAM1/314.a	Explosion Protection Controller 4		4/5/2022	Stefaan.Joris	
=CABINET3+STREAM1/314.b	Explosion Protection Controller 4		4/5/2022	Stefaan.Joris	
=CABINET3+STREAM1/314.c	Explosion Protection Controller 4		4/5/2022	Stefaan.Joris	
=CABINET3+STREAM1/315	RC8		4/5/2022	Stefaan.Joris	
=CABINET3+STREAM1/316	Fike Simulator Module		2/8/2018	SJ	
=CABINET3+STREAM1/317	Status Bus		2/8/2018	SJ	
=CABINET3+STREAM1/318	Fire Bus		8/22/2017	SJ	

Fike Europe E.v.b.a. · Toekomstlaan 52 · B2200 Herentals · Belgium
Tel: +32 14 210031 · Fax +32 14 210743
Email: fike-europe@fike.com · website: www.fike.be

Don Valley Engineering
160737
160737-3-3

Table of contents

File:	Drawingnr:	Revision:	Dwg. By:
160737-3-3	160737-3-3	-	Stefaan.Jo
Date: 4/6/2022	Cabinet type: EPACO MULTI STREAM - 4 STREAMS		Page: 2
			# Pages: 84

Table of contents

Column X: An automatically generated page was edited

F06_001

Page	Page description	supplementary page field	Date	Edited by	X
=CABINET3+STREAM2/320.a	Power Supply Unit 1		4/5/2022	Stefaan.Joris	
=CABINET3+STREAM2/321	Explosion Protection Controller 1		4/5/2022	Stefaan.Joris	
=CABINET3+STREAM2/321.a	Explosion Protection Controller 1		4/5/2022	Stefaan.Joris	
=CABINET3+STREAM2/321.b	Explosion Protection Controller 1		4/5/2022	Stefaan.Joris	
=CABINET3+STREAM2/322	Explosion Protection Controller 2		4/5/2022	Stefaan.Joris	
=CABINET3+STREAM2/322.b	Explosion Protection Controller 2		4/5/2022	Stefaan.Joris	
=CABINET3+STREAM2/323	Explosion Protection Controller 3		4/5/2022	Stefaan.Joris	
=CABINET3+STREAM2/323.a	Explosion Protection Controller 3		4/5/2022	Stefaan.Joris	
=CABINET3+STREAM2/323.b	Explosion Protection Controller 3		4/5/2022	Stefaan.Joris	
=CABINET3+STREAM2/324	Explosion Protection Controller 4		4/5/2022	Stefaan.Joris	
=CABINET3+STREAM2/324.a	Explosion Protection Controller 4		4/5/2022	Stefaan.Joris	
=CABINET3+STREAM2/324.b	Explosion Protection Controller 4		4/5/2022	Stefaan.Joris	
=CABINET3+STREAM2/324.c	Explosion Protection Controller 4		4/5/2022	Stefaan.Joris	
=CABINET3+STREAM2/325	RC8		4/5/2022	Stefaan.Joris	
=CABINET3+STREAM2/327	Fike Simulator Module		2/8/2018	SJ	
=CABINET3+STREAM2/328	Status Bus		2/8/2018	SJ	
=CABINET3+STREAM2/329	Fire Bus		8/22/2017	SJ	
=CABINET3+STREAM3/330.a	Power Supply Unit 1		2/8/2018	SJ	
=CABINET3+STREAM3/331	Explosion Protection Controller 1		4/5/2022	Stefaan.Joris	
=CABINET3+STREAM3/331.a	Explosion Protection Controller 1		4/5/2022	Stefaan.Joris	
=CABINET3+STREAM3/331.b	Explosion Protection Controller 1		4/5/2022	Stefaan.Joris	
=CABINET3+STREAM3/332	Explosion Protection Controller 2		4/5/2022	Stefaan.Joris	
=CABINET3+STREAM3/332.b	Explosion Protection Controller 2		4/5/2022	Stefaan.Joris	
=CABINET3+STREAM3/333	Explosion Protection Controller 3		4/5/2022	Stefaan.Joris	
=CABINET3+STREAM3/333.a	Explosion Protection Controller 3		4/5/2022	Stefaan.Joris	
=CABINET3+STREAM3/333.b	Explosion Protection Controller 3		4/5/2022	Stefaan.Joris	
=CABINET3+STREAM3/334	Explosion Protection Controller 4		4/5/2022	Stefaan.Joris	
=CABINET3+STREAM3/334.a	Explosion Protection Controller 4		4/5/2022	Stefaan.Joris	
=CABINET3+STREAM3/334.b	Explosion Protection Controller 4		4/5/2022	Stefaan.Joris	
=CABINET3+STREAM3/334.c	Explosion Protection Controller 4		4/5/2022	Stefaan.Joris	
=CABINET3+STREAM3/335	RC8		4/5/2022	Stefaan.Joris	
=CABINET3+STREAM3/337	Fike Simulator Module		2/8/2018	SJ	
=CABINET3+STREAM3/338	Status Bus		2/8/2018	SJ	

Previous:
2

Next:
2.b

Table of contents

Column X: An automatically generated page was edited

F06_001

Page	Page description	supplementary page field	Date	Edited by	X
=CABINET3+STREAM3/339	Fire Bus		2/8/2018	SJ	
=CABINET3+STREAM4/340.a	Power Supply Unit 1		4/5/2022	Stefaan.Joris	
=CABINET3+STREAM4/341	Explosion Protection Controller 1		4/5/2022	Stefaan.Joris	
=CABINET3+STREAM4/341.a	Explosion Protection Controller 1		4/5/2022	Stefaan.Joris	
=CABINET3+STREAM4/341.b	Explosion Protection Controller 1		4/5/2022	Stefaan.Joris	
=CABINET3+STREAM4/342	Explosion Protection Controller 2		4/5/2022	Stefaan.Joris	
=CABINET3+STREAM4/342.b	Explosion Protection Controller 2		4/5/2022	Stefaan.Joris	
=CABINET3+STREAM4/343	Explosion Protection Controller 3		4/5/2022	Stefaan.Joris	
=CABINET3+STREAM4/343.a	Explosion Protection Controller 3		4/5/2022	Stefaan.Joris	
=CABINET3+STREAM4/343.b	Explosion Protection Controller 3		4/5/2022	Stefaan.Joris	
=CABINET3+STREAM4/344	Explosion Protection Controller 4		4/5/2022	Stefaan.Joris	
=CABINET3+STREAM4/344.a	Explosion Protection Controller 4		4/5/2022	Stefaan.Joris	
=CABINET3+STREAM4/344.b	Explosion Protection Controller 4		4/5/2022	Stefaan.Joris	
=CABINET3+STREAM4/344.c	Explosion Protection Controller 4		4/5/2022	Stefaan.Joris	
=CABINET3+STREAM4/345	RC8		4/5/2022	Stefaan.Joris	
=CABINET3+STREAM4/347	Fike Simulator Module		2/8/2018	SJ	
=CABINET3+STREAM4/348	Status Bus		2/8/2018	SJ	
=CABINET3+STREAM4/349	Fire Bus		2/8/2018	SJ	

Previous:
2.a

Next:
3

Fike
FIKE EUROPE
Fike Europe E.v.b.a. · Toekomstlaan 52 · B2200 Herentals · Belgium
Tel. +32 14 210031 · Fax +32 14 210743
Email: fike-europe@fike.com · website: www.fike .be

Don Valley Engineering
160737
160737-3-3

Table of contents

File:	Drawingnr:	Revision:	Dwg. By:
160737-3-3	160737-3-3	-	Stefaan.Jo
Date: 4/6/2022	Cabinet type: EPACO MULTI STREAM - 4 STREAMS		Page: 2.b
			# Pages: 84

Manuals Info Page

	Part Number	Document Number
PSU	E10-0067	8.8514.00
EPC	E10-0066	8.8513.00
AM	E10-0068	8.8519.00
RC8	E10-0069	8.8518.00

Fike Europe E.v.b.a. · Toekomstlaan 52 · B2200 Herentals · Belgium
Tel. +32 14 210031 · Fax +32 14 210743
Email: fike-europe@fike.com · website: www.fike .be

Don Valley Engineering
160737
160737-3-3

Manuals Info Page

File:	Drawingnr:	Revision:	Dwg. By:
160737-3-3	160737-3-3	-	Stefaan.Jo
Date: 4/6/2022	Cabinet type: EPACO MULTI STREAM - 4 STREAMS		Page: 3 / # Pages: 84

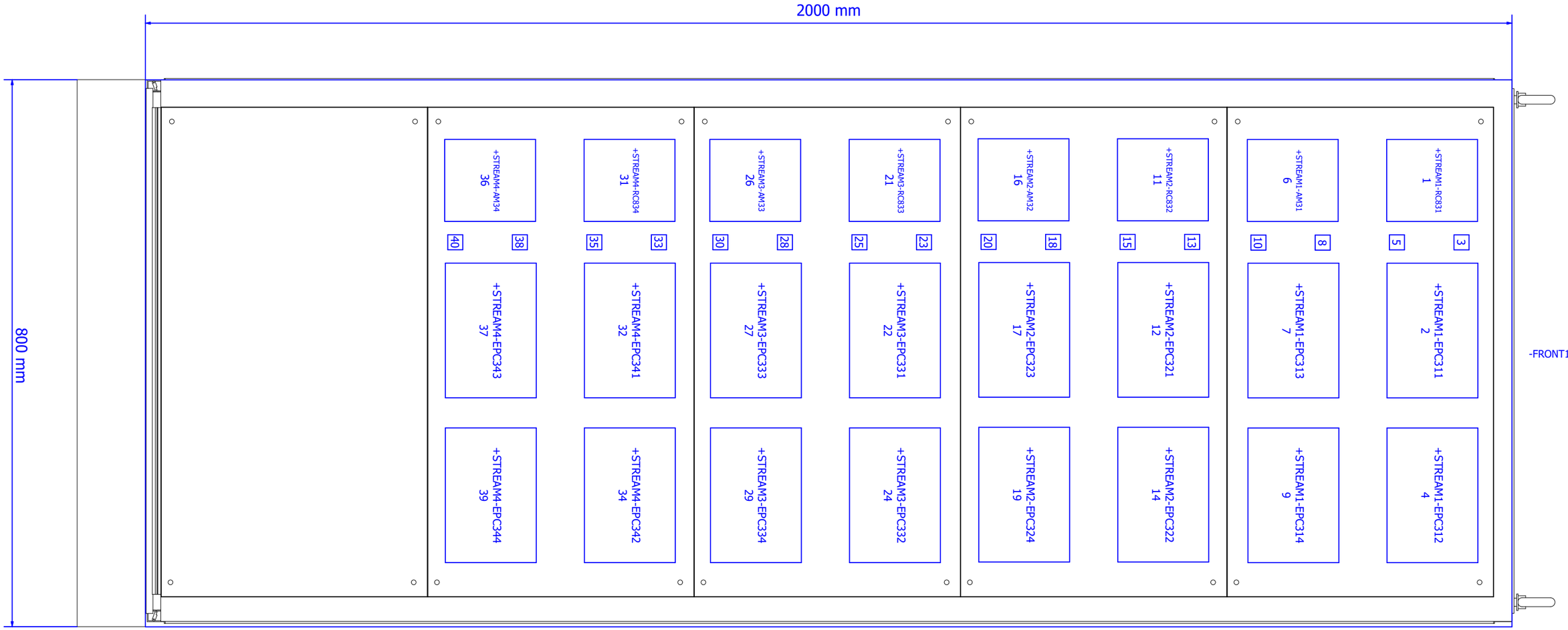

Previous:
3

Next:
21

Fike
FIKE EUROPE
Fike Europe E.v.b.a. · Toekomstlaan 52 · B2200 Herentals · Belgium
Tel. +32 14 210031 · Fax +32 14 210743
Email: fike-europe@fike.com · website: www.fike.be

Don Valley Engineering
160737
160737-3-3

Layout cabinet

File:	Drawingnr:	Revision:	Dwg. By:
160737-3-3	160737-3-3	-	Stefaan.Jo
Date: 4/6/2022	Cabinet type: EPACO MULTI STREAM - 4 STREAMS		Page: 20
			# Pages: 84

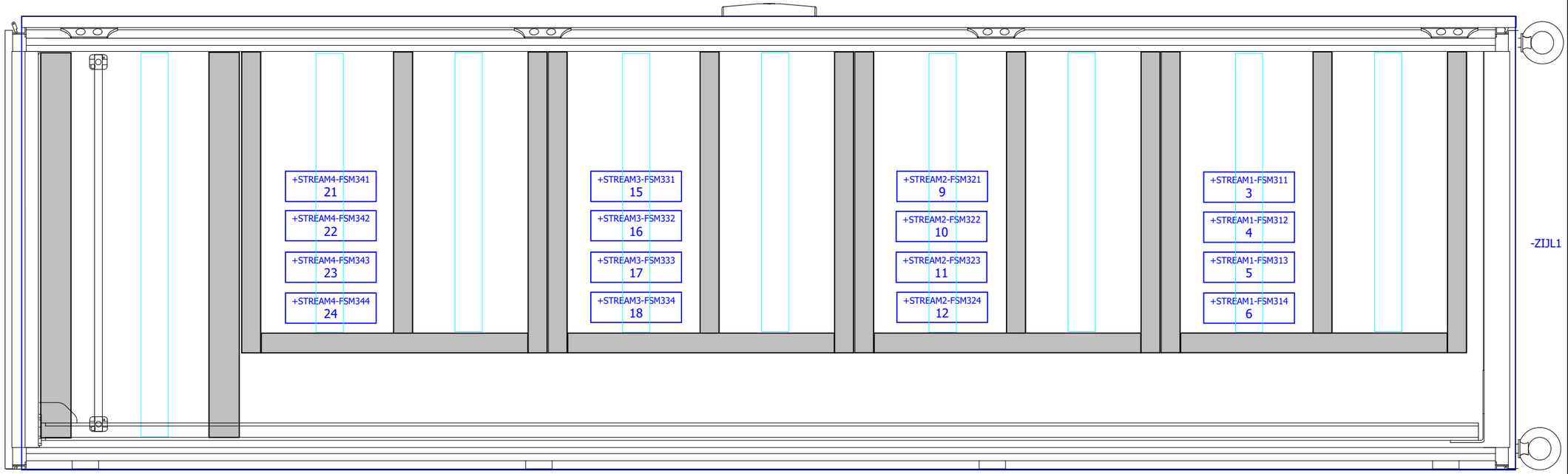

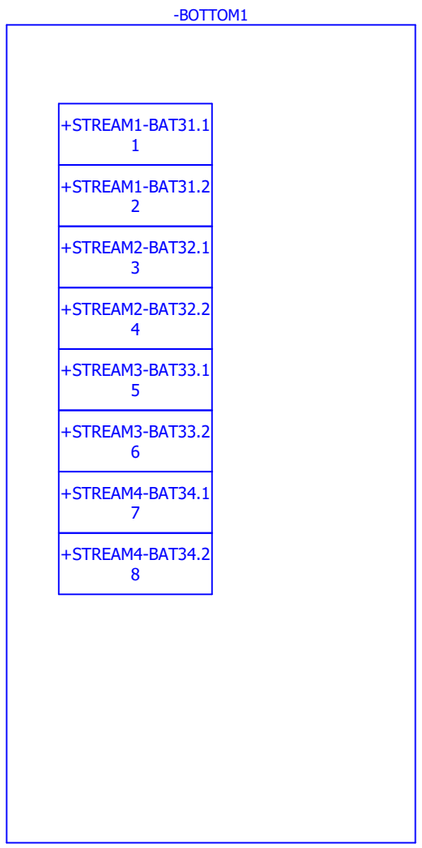

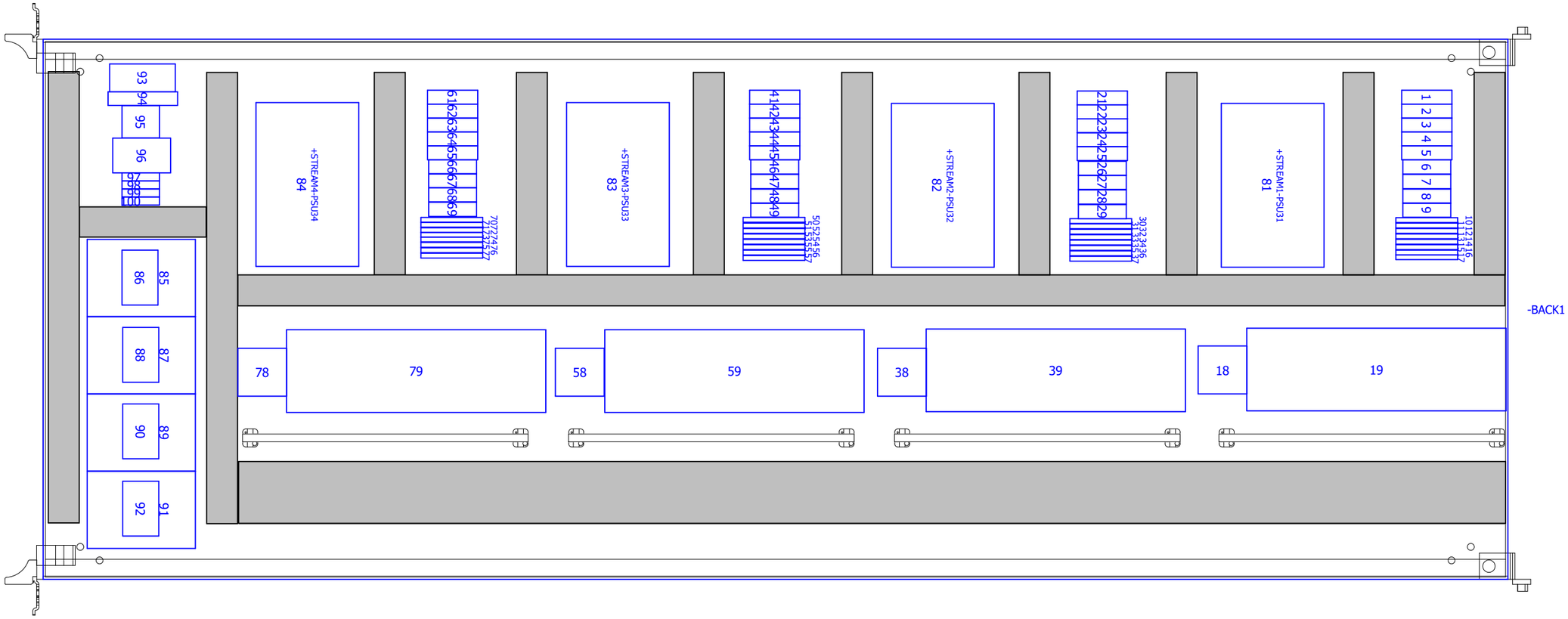

Previous:
20

Next:
22

Fike
FIKE EUROPE
Fike Europe E.v.b.a. · Toekomstlaan 52 · B2200 Herentals · Belgium
Tel. +32 14 210031 · Fax +32 14 210743
Email: fike-europe@fike.com · website: www.fike .be

Don Valley Engineering
160737
160737-3-3

Layout cabinet

File:	Drawingnr:	Revision:	Dwg. By:
160737-3-3	160737-3-3	-	Stefaan.Jo
Date: 4/6/2022	Cabinet type: EPACO MULTI STREAM - 4 STREAMS		Page: 21 / # Pages: 84

Enclosure legend

F18_001

Item number	Device tag	Type number	Part number	Manufacturer	Function text
1	DC311	A9S60220	SE.A9S60220	SE	
2	DC312	A9S60220	SE.A9S60220	SE	
3	DC313	A9S60220	SE.A9S60220	SE	
4	DC314	A9S60220	SE.A9S60220	SE	
5	DC315	A9S60220	SE.A9S60220	SE	
6	RS311				
7	RS312				
8	RS313				
9	RS314				
10	K311	PLC-RSC- 24DC/21	PXC.2966171	PXC	
11	K313	PLC-RSC- 24DC/21	PXC.2966171	PXC	
12	KDS311	PLC-RSC- 24DC/21	PXC.2966171	PXC	REMOTE
13	KDS314	PLC-RSC- 24DC/21	PXC.2966171	PXC	=
14	K312	PLC-RSC- 24DC/21	PXC.2966171	PXC	
15	K314	PLC-RSC- 24DC/21	PXC.2966171	PXC	
16	KDS312	PLC-RSC- 24DC/21	PXC.2966171	PXC	REMOTE
17	KDS313	PLC-RSC- 24DC/21	PXC.2966171	PXC	=
18	X311				
19	X312				
21	DC321	A9S60220	SE.A9S60220	SE	
22	DC322	A9S60220	SE.A9S60220	SE	
23	DC323	A9S60220	SE.A9S60220	SE	
24	DC324	A9S60220	SE.A9S60220	SE	
25	DC325	A9S60220	SE.A9S60220	SE	
26	RS321				
27	RS322				
28	RS323				
29	RS324				
30	K321	PLC-RSC- 24DC/21	PXC.2966171	PXC	
31	K323	PLC-RSC- 24DC/21	PXC.2966171	PXC	
32	KDS321	PLC-RSC- 24DC/21	PXC.2966171	PXC	REMOTE
33	KDS323	PLC-RSC- 24DC/21	PXC.2966171	PXC	=
34	K322	PLC-RSC- 24DC/21	PXC.2966171	PXC	
35	K324	PLC-RSC- 24DC/21	PXC.2966171	PXC	
36	KDS322	PLC-RSC- 24DC/21	PXC.2966171	PXC	REMOTE
37	KDS324	PLC-RSC- 24DC/21	PXC.2966171	PXC	=
38	X321				
39	X322				
41	DC331	A9S60220	SE.A9S60220	SE	
42	DC332	A9S60220	SE.A9S60220	SE	
43	DC333	A9S60220	SE.A9S60220	SE	
44	DC334	A9S60220	SE.A9S60220	SE	
45	DC335	A9S60220	SE.A9S60220	SE	
46	RS331				
47	RS332				
48	RS333				
49	RS334				
50	K331	PLC-RSC- 24DC/21	PXC.2966171	PXC	
51	K333	PLC-RSC- 24DC/21	PXC.2966171	PXC	
52	KDS331	PLC-RSC- 24DC/21	PXC.2966171	PXC	REMOTE
53	KDS333	PLC-RSC- 24DC/21	PXC.2966171	PXC	=
54	K332	PLC-RSC- 24DC/21	PXC.2966171	PXC	
55	K334	PLC-RSC- 24DC/21	PXC.2966171	PXC	
56	KDS332	PLC-RSC- 24DC/21	PXC.2966171	PXC	REMOTE
57	KDS334	PLC-RSC- 24DC/21	PXC.2966171	PXC	=
58	X331				
59	X332				

Fike Europe E.v.b.a. · Toekomstlaan 52 · B2200 Herentals · Belgium
Tel. +32 14 210031 · Fax +32 14 210743
Email: fike-europe@fike.com · website: www.fike.be

Don Valley Engineering
160737
160737-3-3

Enclosure legend

File:	*Drawingnr:*	*Revision:*	*Dwg. By:*
160737-3-3	160737-3-3	-	Stefaan.Jo
Date: 4/6/2022	*Cabinet type:* EPACO MULTI STREAM - 4 STREAMS		Page: 22
			# Pages: 84

Enclosure legend

F18_001

Item number	Device tag	Type number	Part number	Manufacturer	Function text
61	DC341	A9S60220	SE.A9S60220	SE	
62	DC342	A9S60220	SE.A9S60220	SE	
63	DC343	A9S60220	SE.A9S60220	SE	
64	DC344	A9S60220	SE.A9S60220	SE	
65	DC345	A9S60220	SE.A9S60220	SE	
66	RS341				
67	RS342				
68	RS343				
69	RS344				
70	K341	PLC-RSC- 24DC/21	PXC.2966171	PXC	
71	K343	PLC-RSC- 24DC/21	PXC.2966171	PXC	
72	KDS341	PLC-RSC- 24DC/21	PXC.2966171	PXC	REMOTE
73	KDS343	PLC-RSC- 24DC/21	PXC.2966171	PXC	=
74	K342	PLC-RSC- 24DC/21	PXC.2966171	PXC	
75	K344	PLC-RSC- 24DC/21	PXC.2966171	PXC	
76	KDS342	PLC-RSC- 24DC/21	PXC.2966171	PXC	REMOTE
77	KDS344	PLC-RSC- 24DC/21	PXC.2966171	PXC	=
78	X341				
79	X342				
81	PSU31	PSU	FIKE.PSU	FIKE	
82	PSU32	PSU	FIKE.PSU	FIKE	
83	PSU33	PSU	FIKE.PSU	FIKE	
84	PSU34	PSU	FIKE.PSU	FIKE	
85	TR31	168138	FIKE.168138	FIKE	
86	ACF31	FN612-3/06	SCHAF.FN612-3/06	SCHAF	
87	TR32	168138	FIKE.168138	FIKE	
88	ACF32	FN612-3/06	SCHAF.FN612-3/06	SCHAF	
89	TR33	168138	FIKE.168138	FIKE	
90	ACF33	FN612-3/06	SCHAF.FN612-3/06	SCHAF	
91	TR34	168138	FIKE.168138	FIKE	
92	ACF34	FN612-3/06	SCHAF.FN612-3/06	SCHAF	
93	F3	A9F79220	SE.A9F79220	SE	MAIN FUSE
94	SPD31	PLT-SEC-T3-230-FM	PXC.2905229	PXC	
95	X3				
96	SP3	SD-F/SC	PXC.2963352	PXC	
97	RAM1				
98	RAM2				
99	RAM3				
100	RAM4				

Fike Europe E.v.b.a. · Toekomstlaan 52 · B2200 Herentals · Belgium
Tel. +32 14 210031 · Fax +32 14 210743
Email: fike-europe@fike.com · website: www.fike.be

Don Valley Engineering
160737
160737-3-3

Enclosure legend

File:	*Drawingnr:*	*Revision:*	*Dwg. By:*
160737-3-3	160737-3-3	-	Stefaan.Jo
Date: 4/6/2022	*Cabinet type:* EPACO MULTI STREAM - 4 STREAMS		Page: 22.a
			# Pages: 84

Enclosure legend

F18_001

Item number	Device tag	Type number	Part number	Manufacturer	Function text
1	BAT31.1	BAT7.2Ah	FIKE.BAT7.2Ah	FIKE	
2	BAT31.2	BAT7.2Ah	FIKE.BAT7.2Ah	FIKE	
3	BAT32.1	BAT7.2Ah	FIKE.BAT7.2Ah	FIKE	
4	BAT32.2	BAT7.2Ah	FIKE.BAT7.2Ah	FIKE	
5	BAT33.1	BAT7.2Ah	FIKE.BAT7.2Ah	FIKE	
6	BAT33.2	BAT7.2Ah	FIKE.BAT7.2Ah	FIKE	
7	BAT34.1	BAT7.2Ah	FIKE.BAT7.2Ah	FIKE	
8	BAT34.2	BAT7.2Ah	FIKE.BAT7.2Ah	FIKE	

Previous:
22.a

Next:
24

Enclosure legend

F18_001

Item number	Device tag	Type number	Part number	Manufacturer	Function text
1	RC831	RC8	FIKE.RC8	FIKE	
2	EPC311	EPC	FIKE.EPC	FIKE	EXPLOSION CONTROLLER
3	DS311	ZB4BG2	SE.ZB4BG2	SE	
4	EPC312	EPC	FIKE.EPC	FIKE	EXPLOSION CONTROLLER
5	DS312	ZB4BG2	SE.ZB4BG2	SE	
6	AM31	AM	FIKE.AM	FIKE	ANNUNCIATOR MODULE
7	EPC313	EPC	FIKE.EPC	FIKE	EXPLOSION CONTROLLER
8	DS313	ZB4BG2	SE.ZB4BG2	SE	
9	EPC314	EPC	FIKE.EPC	FIKE	EXPLOSION CONTROLLER
10	DS314	ZB4BG2	SE.ZB4BG2	SE	
11	RC832	RC8	FIKE.RC8	FIKE	
12	EPC321	EPC	FIKE.EPC	FIKE	EXPLOSION CONTROLLER
13	DS321	ZB4BG2	SE.ZB4BG2	SE	
14	EPC322	EPC	FIKE.EPC	FIKE	EXPLOSION CONTROLLER
15	DS322	ZB4BG2	SE.ZB4BG2	SE	
16	AM32	AM	FIKE.AM	FIKE	ANNUNCIATOR MODULE
17	EPC323	EPC	FIKE.EPC	FIKE	EXPLOSION CONTROLLER
18	DS323	ZB4BG2	SE.ZB4BG2	SE	
19	EPC324	EPC	FIKE.EPC	FIKE	
20	DS324	ZB4BG2	SE.ZB4BG2	SE	
21	RC833	RC8	FIKE.RC8	FIKE	
22	EPC331	EPC	FIKE.EPC	FIKE	EXPLOSION CONTROLLER
23	DS131	ZB4BG2	SE.ZB4BG2	SE	
24	EPC332	EPC	FIKE.EPC	FIKE	EXPLOSION CONTROLLER
25	DS132	ZB4BG2	SE.ZB4BG2	SE	
26	AM33	AM	FIKE.AM	FIKE	ANNUNCIATOR MODULE
27	EPC333	EPC	FIKE.EPC	FIKE	EXPLOSION CONTROLLER
28	DS133	ZB4BG2	SE.ZB4BG2	SE	
29	EPC334	EPC	FIKE.EPC	FIKE	
30	DS134	ZB4BG2	SE.ZB4BG2	SE	
31	RC834	RC8	FIKE.RC8	FIKE	
32	EPC341	EPC	FIKE.EPC	FIKE	EXPLOSION CONTROLLER
33	DS141	ZB4BG2	SE.ZB4BG2	SE	
34	EPC342	EPC	FIKE.EPC	FIKE	EXPLOSION CONTROLLER
35	DS142	ZB4BG2	SE.ZB4BG2	SE	
36	AM34	AM	FIKE.AM	FIKE	ANNUNCIATOR MODULE
37	EPC343	EPC	FIKE.EPC	FIKE	EXPLOSION CONTROLLER
38	DS143	ZB4BG2	SE.ZB4BG2	SE	
39	EPC344	EPC	FIKE.EPC	FIKE	
40	DS144	ZB4BG2	SE.ZB4BG2	SE	

Fike Europe E.v.b.a. · Toekomstlaan 52 · B2200 Herentals · Belgium
Tel. +32 14 210031 · Fax +32 14 210743
Email: fike-europe@fike.com · website: www.fike.be

Don Valley Engineering
160737
160737-3-3

Enclosure legend

File:	*Drawingnr:*	*Revision:*	*Dwg. By:*
160737-3-3	160737-3-3	-	Stefaan.Jo
Date: 4/6/2022	*Cabinet type:* EPACO MULTI STREAM - 4 STREAMS		Page: 24
			# Pages: 84

Enclosure legend

F18_001

Item number	Device tag	Type number	Part number	Manufacturer	Function text
3	FSM311	FSM	FIKE.FSM	FIKE	FIKE SIMULATOR MODULE
4	FSM312	FSM	FIKE.FSM	FIKE	=
5	FSM313	FSM	FIKE.FSM	FIKE	=
6	FSM314	FSM	FIKE.FSM	FIKE	=
9	FSM321	FSM	FIKE.FSM	FIKE	=
10	FSM322	FSM	FIKE.FSM	FIKE	=
11	FSM323	FSM	FIKE.FSM	FIKE	=
12	FSM324	FSM	FIKE.FSM	FIKE	=
15	FSM331	FSM	FIKE.FSM	FIKE	=
16	FSM332	FSM	FIKE.FSM	FIKE	=
17	FSM333	FSM	FIKE.FSM	FIKE	=
18	FSM334	FSM	FIKE.FSM	FIKE	=
21	FSM341	FSM	FIKE.FSM	FIKE	=
22	FSM342	FSM	FIKE.FSM	FIKE	=
23	FSM343	FSM	FIKE.FSM	FIKE	=
24	FSM344	FSM	FIKE.FSM	FIKE	=

Fike Europe E.v.b.a. · Toekomstlaan 52 · B2200 Herentals · Belgium
Tel. +32 14 210031 · Fax +32 14 210743
Email: fike-europe@fike.com · website: www.fike.be

Don Valley Engineering
160737
160737-3-3

Enclosure legend

File:	*Drawingnr:*	*Revision:*	*Dwg. By:*
160737-3-3	160737-3-3	-	Stefaan.Jo
Date: 4/6/2022	*Cabinet type:* EPACO MULTI STREAM - 4 STREAMS		Page: 25
			# Pages: 84

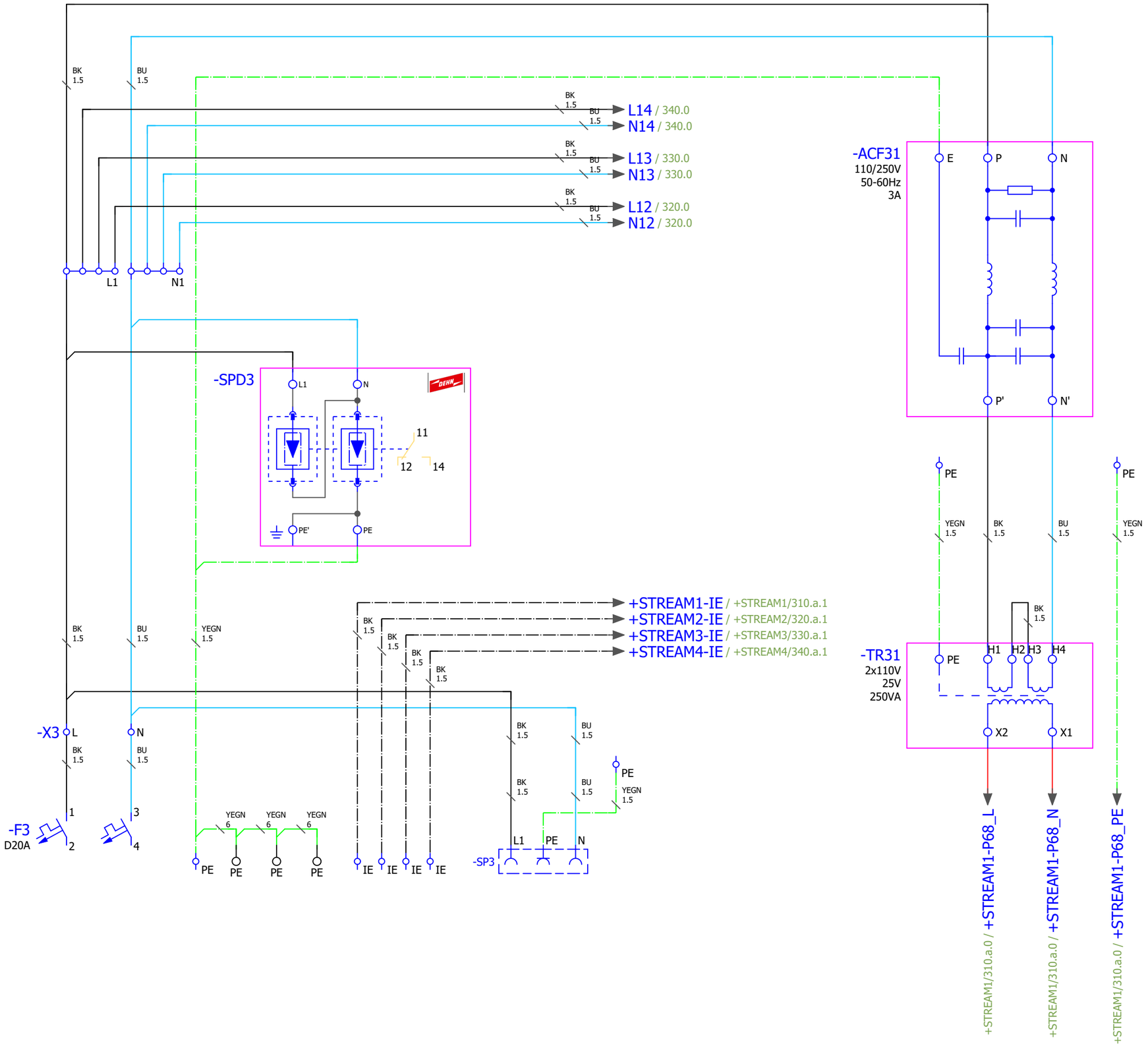

Previous:
+/25

Next:
320

Fike Europe E.v.b.a. · Toekomstlaan 52 · B2200 Herentals · Belgium
Tel. +32 14 210031 · Fax +32 14 210743
Email: fike-europe@fike.com · website: www.fike .be

Don Valley Engineering
160737
160737-3-3

Power in

File:	Drawingnr:	Revision:	Dwg. By:
160737-3-3	160737-3-3	-	Stefaan.Jo
Date: 4/6/2022	Cabinet type: EPACO MULTI STREAM - 4 STREAMS		Page: 310 / # Pages: 84

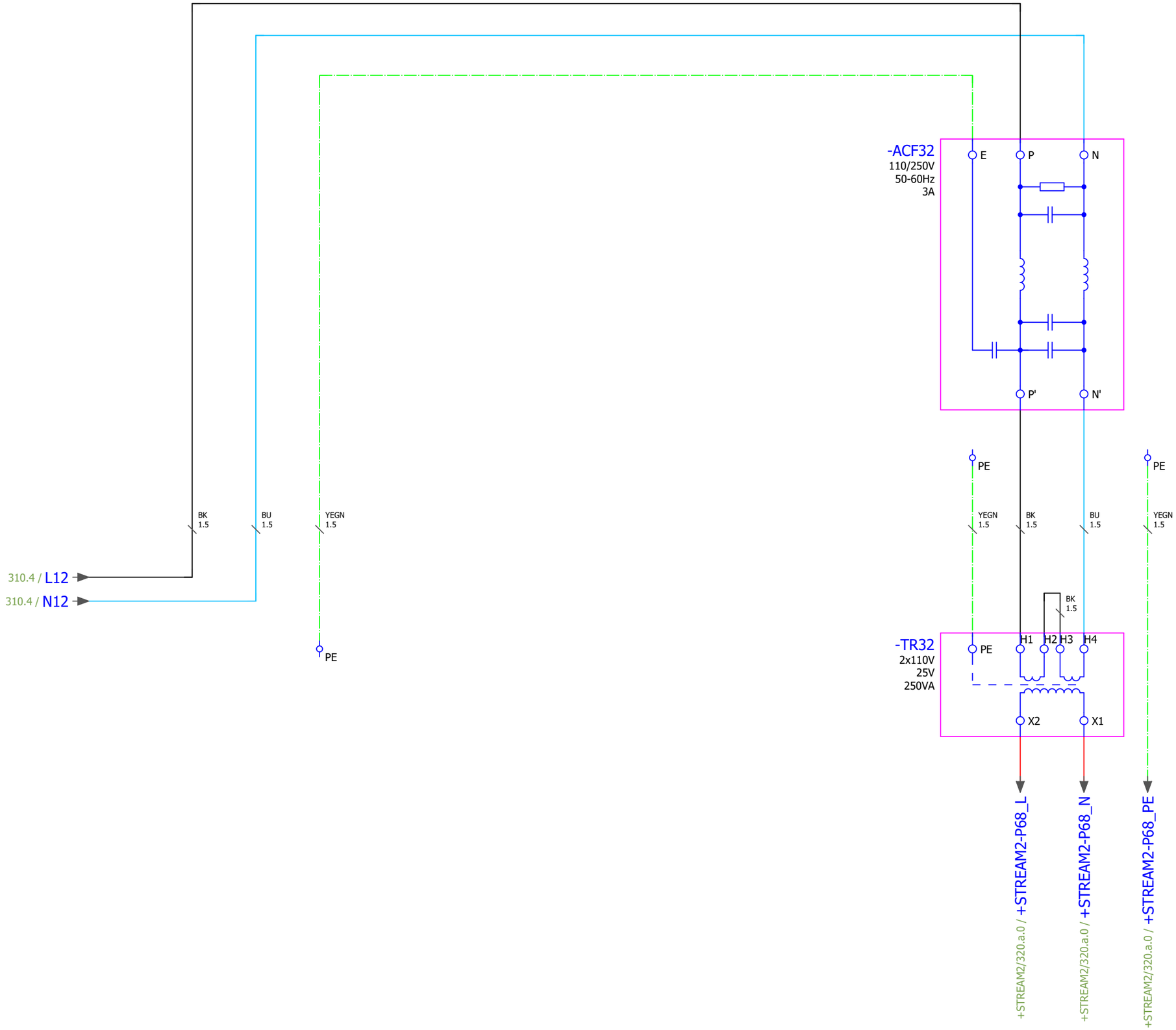

Previous:
310

Next:
330

Fike
FIKE EUROPE
Fike Europe E.v.b.a. · Toekomstlaan 52 · B2200 Herentals · Belgium
Tel. +32 14 210031 · Fax +32 14 210743
Email: fike-europe@fike.com · website: www.fike .be

Don Valley Engineering
160737
160737-3-3

Power in

File:	Drawingnr:	Revision:	Dwg. By:
160737-3-3	160737-3-3	-	Stefaan.Jo
Date: 4/6/2022	Cabinet type: EPACO MULTI STREAM - 4 STREAMS		Page: 320
			# Pages: 84

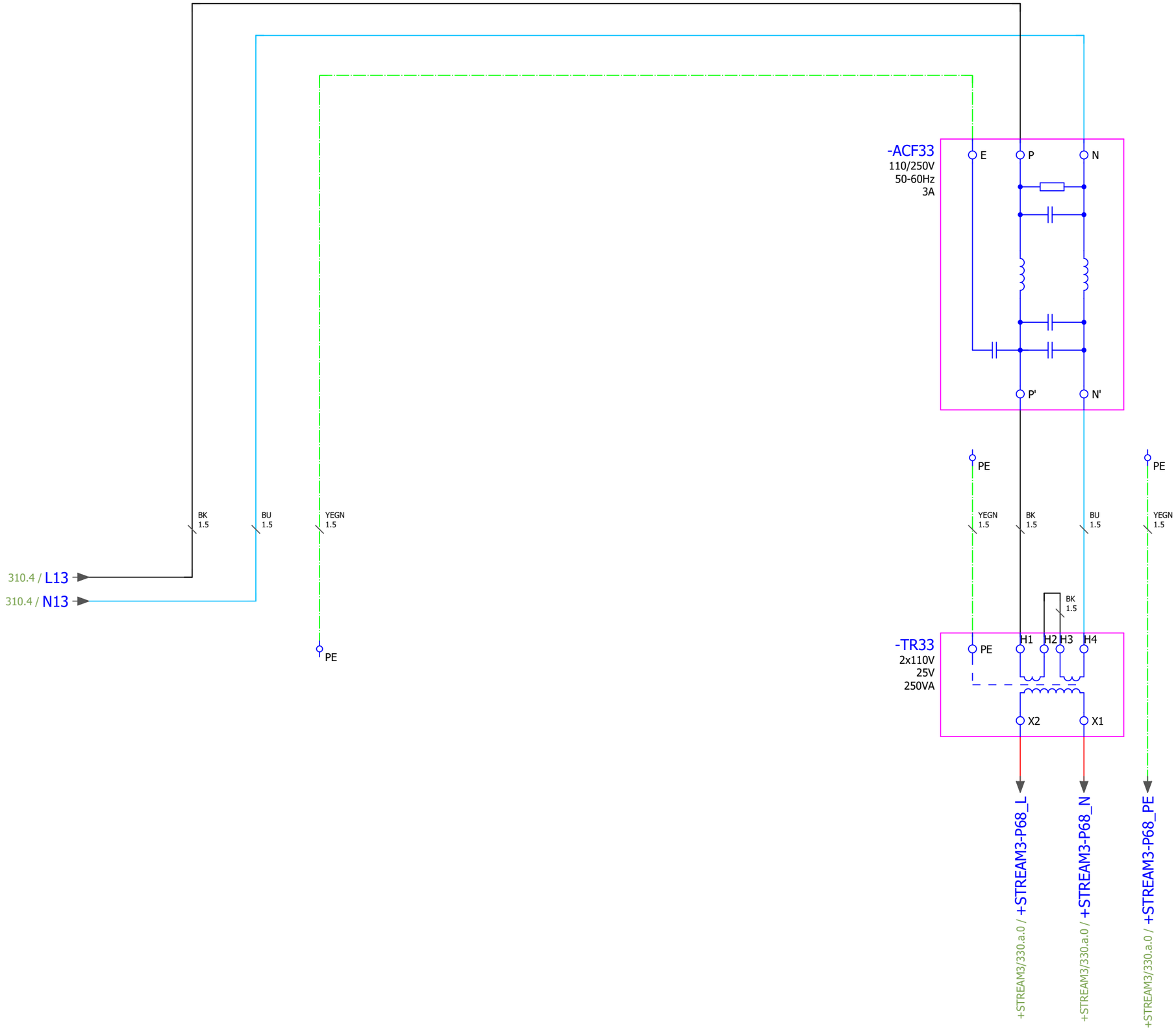

Previous:
320

Next:
340

Fike
FIKE EUROPE
Fike Europe E.v.b.a. · Toekomstlaan 52 · B2200 Herentals · Belgium
Tel. +32 14 210031 · Fax +32 14 210743
Email: fike-europe@fike.com · website: www.fike .be

Don Valley Engineering
160737
160737-3-3

Power in

File:	Drawingnr:	Revision:	Dwg. By:
160737-3-3	160737-3-3	-	Stefaan.Jo
Date: 4/6/2022	Cabinet type: EPACO MULTI STREAM - 4 STREAMS		Page: 330
			# Pages: 84

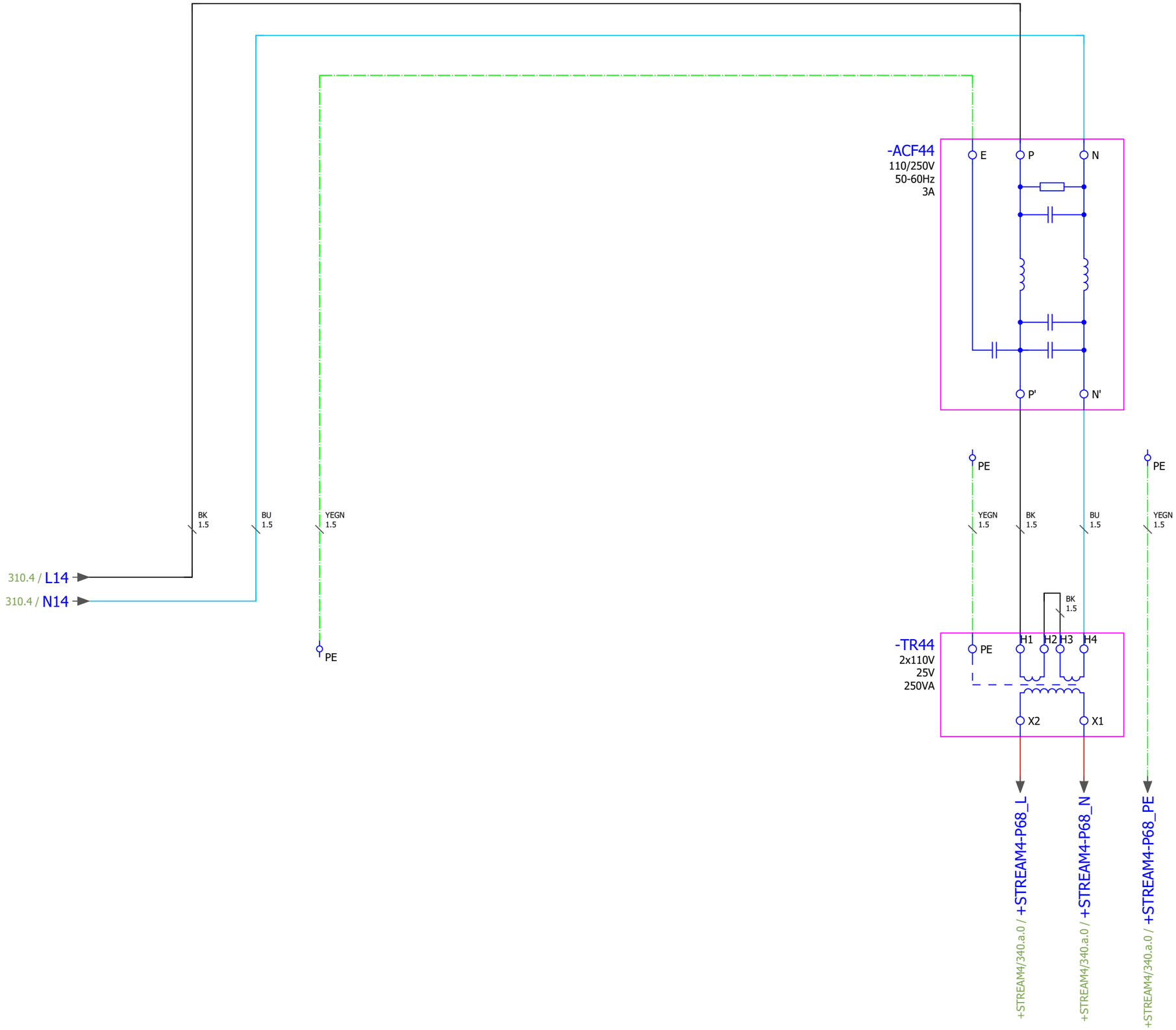

Previous:
330

Next:
+STREAM1/310.a

Fike
FIKE EUROPE
Fike Europe E.v.b.a. · Toekomstlaan 52 · B2200 Herentals · Belgium
Tel. +32 14 210031 · Fax +32 14 210743
Email: fike-europe@fike.com · website: www.fike .be

Don Valley Engineering
160737
160737-3-3

Power in

File:	*Drawingnr:*	*Revision:*	*Dwg. By:*
160737-3-3	160737-3-3	-	Stefaan.Jo
Date: 4/6/2022	*Cabinet type:* EPACO MULTI STREAM - 4 STREAMS		Page: 340
			# Pages: 84

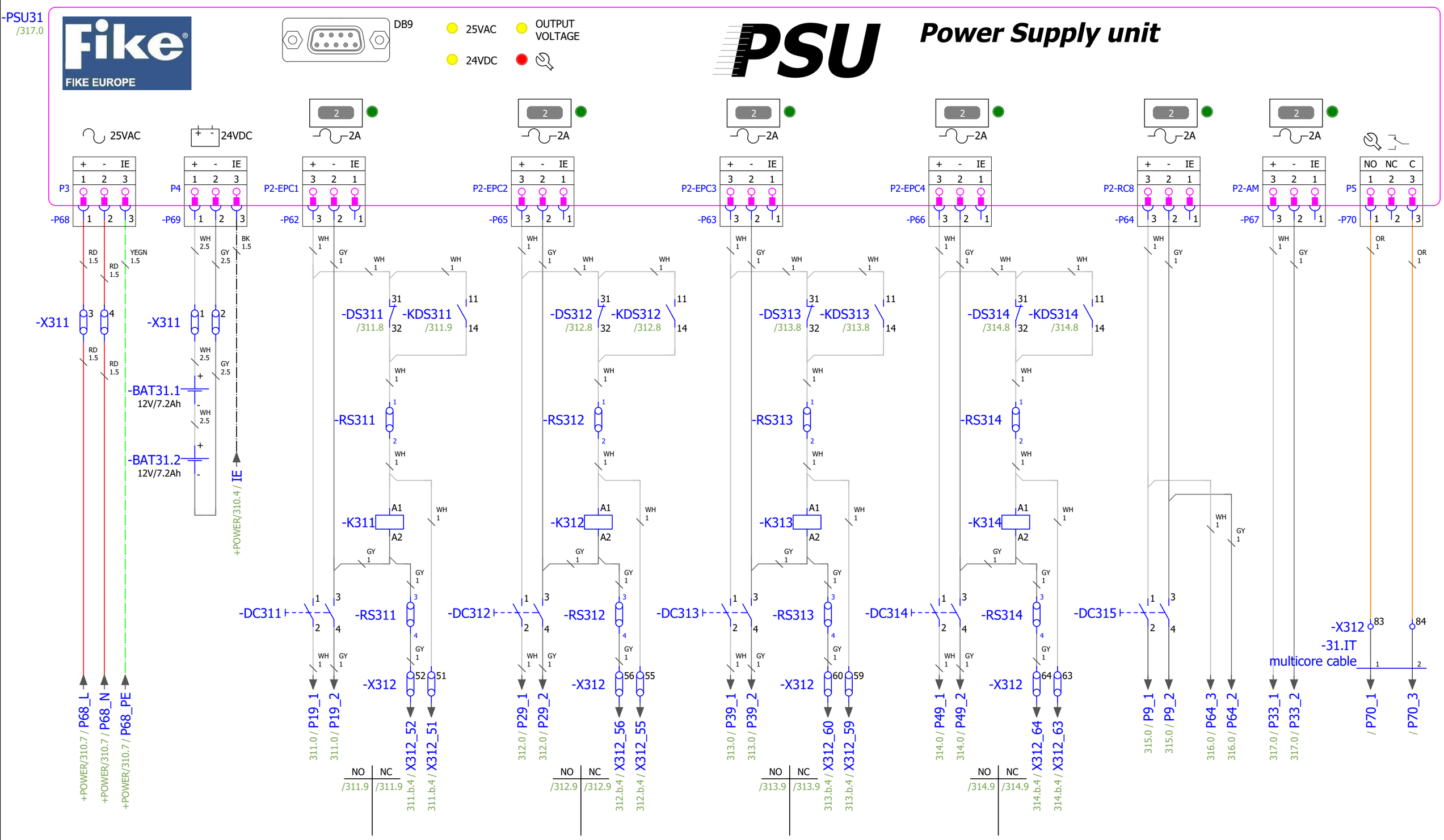

Previous:
+POWER/340

Next:
311

Fike Europe E.v.b.a. · Toekomstlaan 52 · B2200 Herentals · Belgium
Tel. +32 14 210031 · Fax +32 14 210743
Email: fike-europe@fike.com · website: www.fike.be

Don Valley Engineering
160737
160737-3-3

Power Supply Unit 1

File:	Drawingnr:	Revision:	Dwg. By:
160737-3-3	160737-3-3	-	Stefaan.Jo
Date: 4/6/2022	Cabinet type: EPACO MULTI STREAM - 4 STREAMS		Page: 310.a
			# Pages: 84

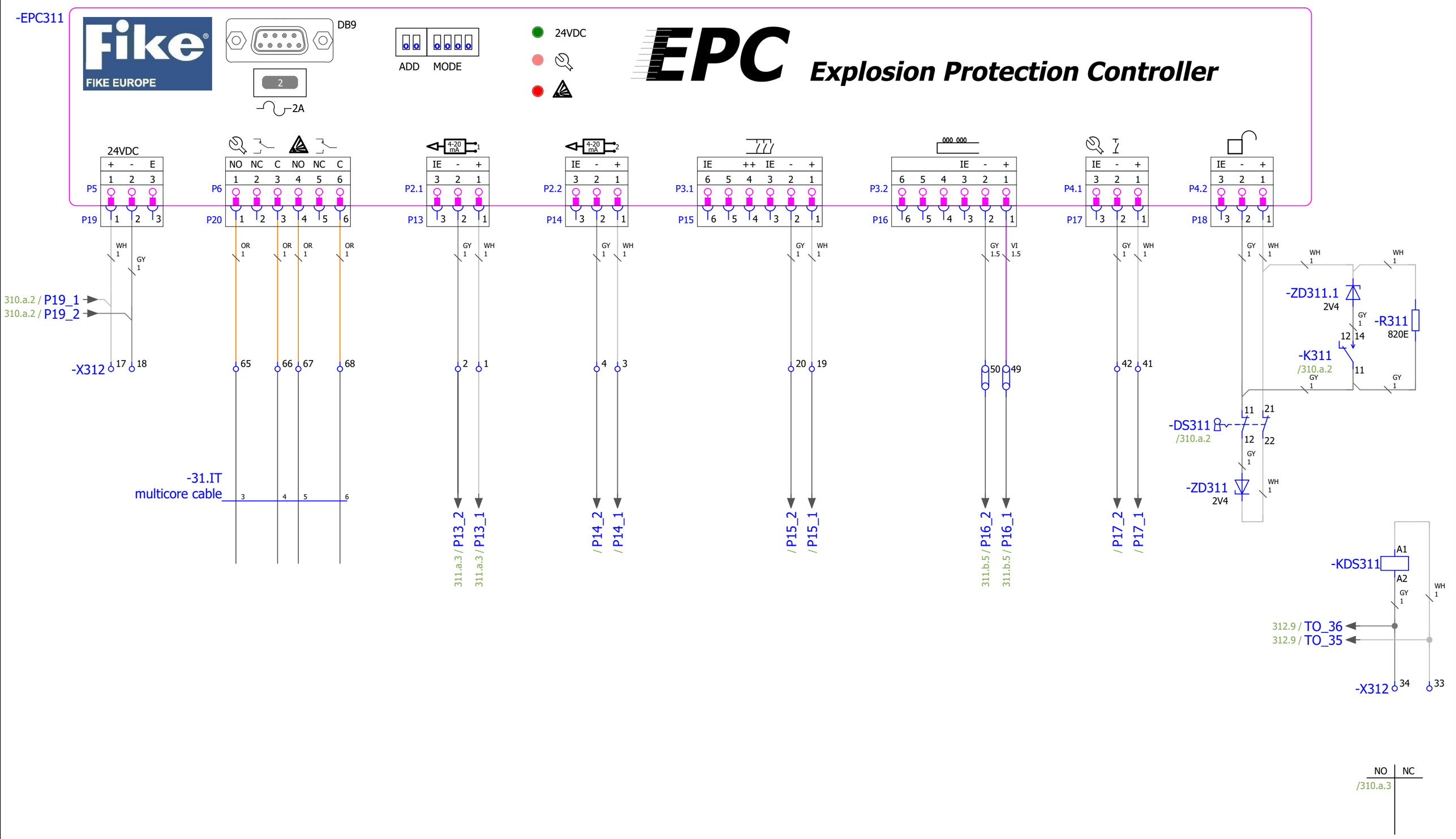

Previous:
310.a

Next:
311.a

Fike Europe E.v.b.a. · Toekomstlaan 52 · B2200 Herentals · Belgium
Tel. +32 14 210031 · Fax +32 14 210743
Email: fike-europe@fike.com · website: www.fike.be

Don Valley Engineering
160737
160737-3-3

Explosion Protection Controller 1

File:	Drawingnr:	Revision:	Dwg. By:
160737-3-3	160737-3-3	-	Stefaan.Jo
Date: 4/6/2022	Cabinet type: EPACO MULTI STREAM - 4 STREAMS		Page: 311 / # Pages: 84

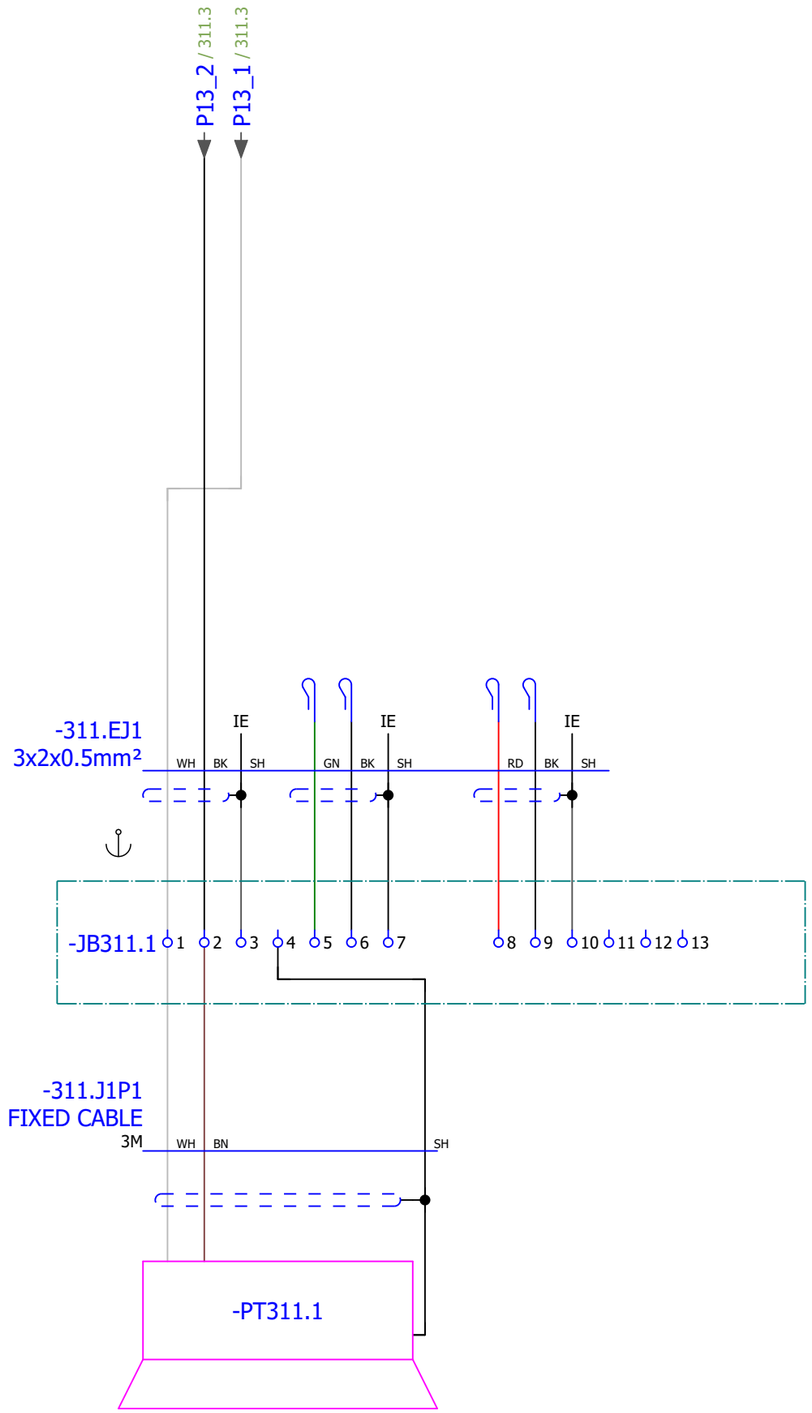

ATTENTION: Do not cut the breather tube from the detector(s) in the junction box

Fike Europe E.v.b.a. · Toekomstlaan 52 · B2200 Herentals · Belgium
Tel. +32 14 210031 · Fax +32 14 210743
Email: fike-europe@fike.com · website: www.fike .be

Don Valley Engineering 160737 160737-3-3	Explosion Protection Controller 1	File: 160737-3-3	Drawingnr: 160737-3-3	Revision: -	Dwg. By: Stefaan.Jo
		Date: 4/6/2022	Cabinet type: EPACO MULTI STREAM - 4 STREAMS		Page: 311.a # Pages: 84

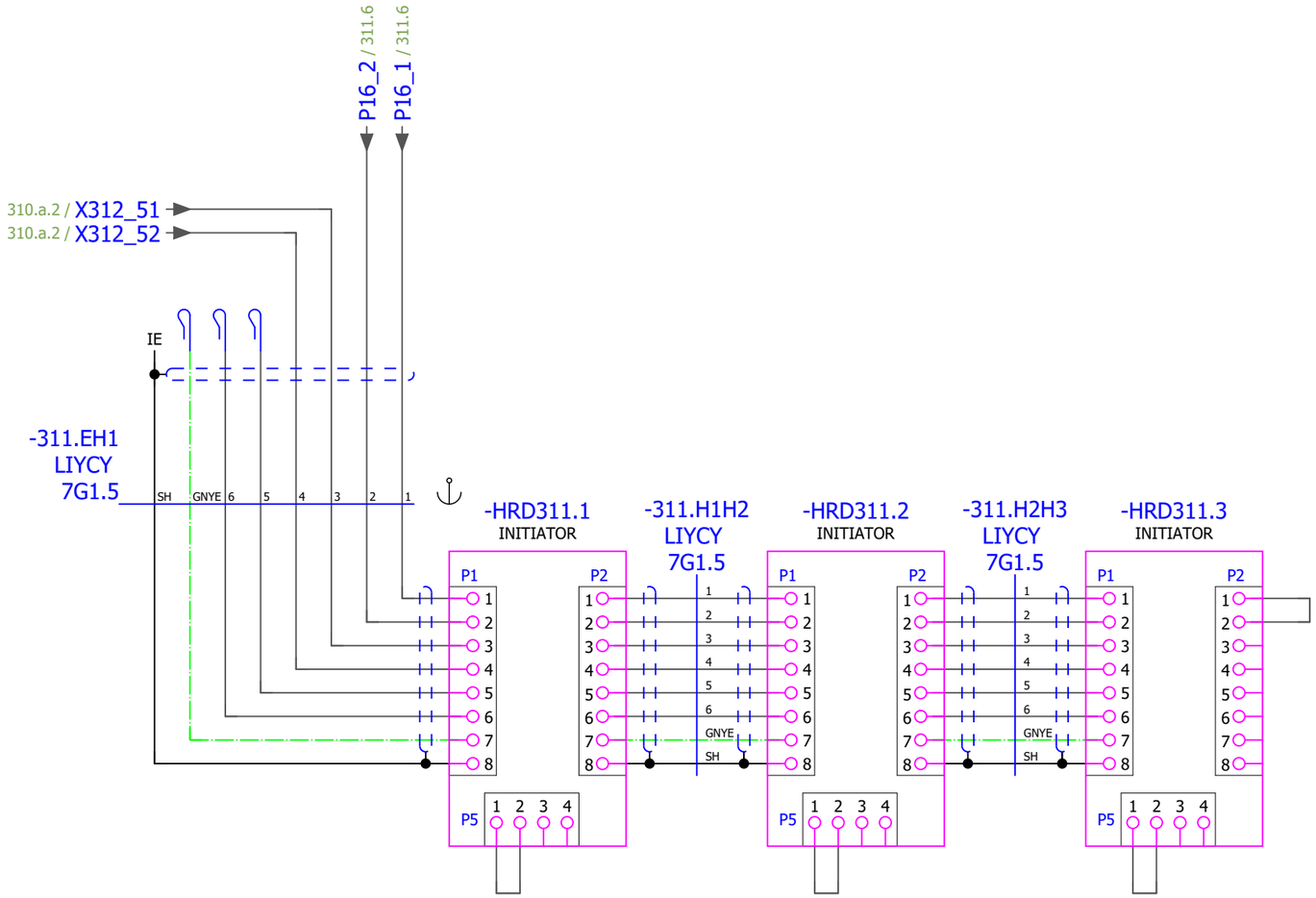

Previous:
311.a

Next:
312

Fike
FIKE EUROPE
Fike Europe E.v.b.a. · Toekomstlaan 52 · B2200 Herentals · Belgium
Tel. +32 14 210031 · Fax +32 14 210743
Email: fike-europe@fike.com · website: www.fike .be

Don Valley Engineering
160737
160737-3-3

Explosion Protection Controller 1

File:	Drawingnr:	Revision:	Dwg. By:
160737-3-3	160737-3-3	-	Stefaan.Jo
Date: 4/6/2022	Cabinet type: EPACO MULTI STREAM - 4 STREAMS		Page: 311.b
			# Pages: 84

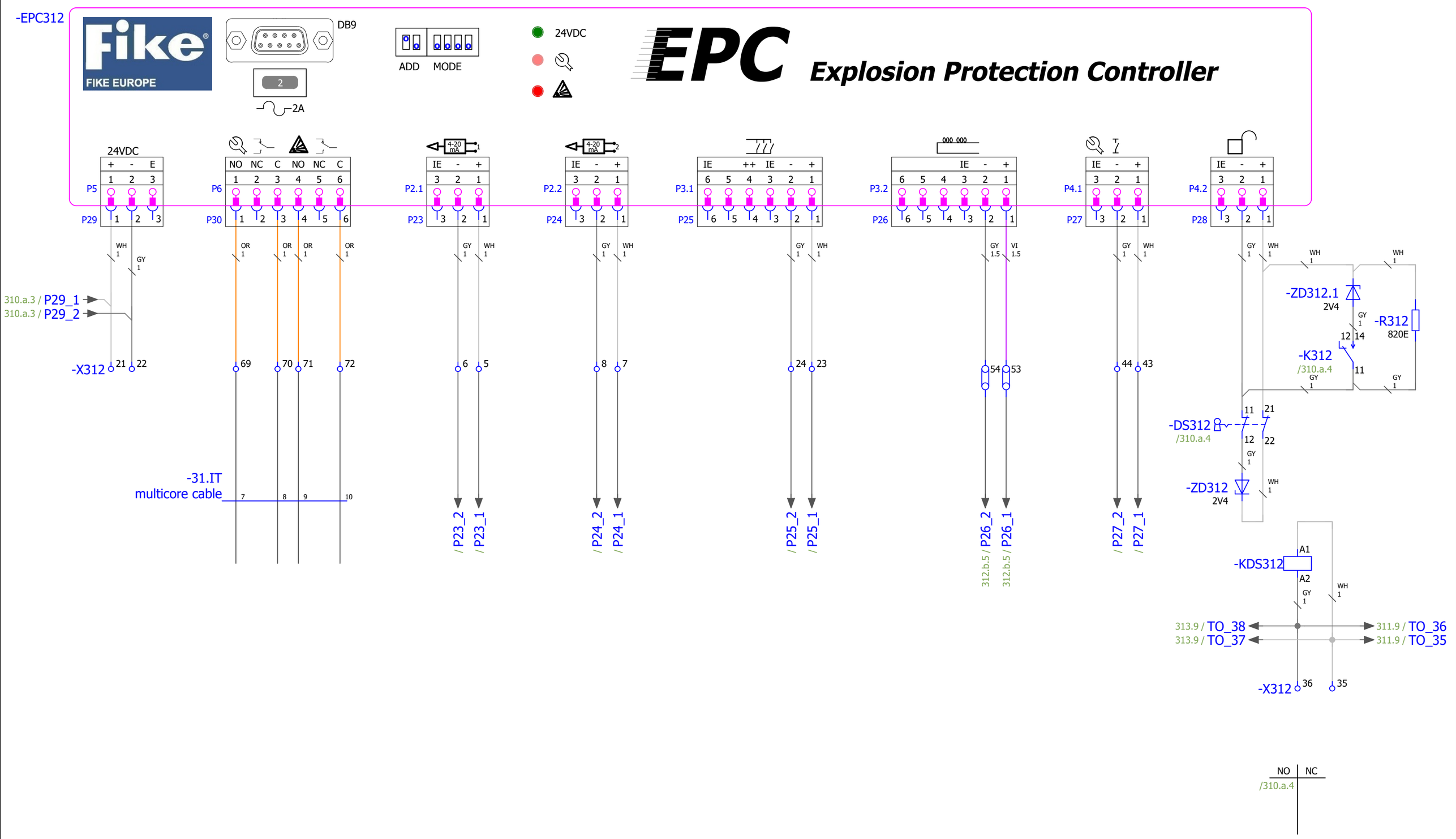

Fike Europe E.v.b.a. · Toekomstlaan 52 · B2200 Herentals · Belgium
Tel. +32 14 210031 · Fax +32 14 210743
Email: fike-europe@fike.com · website: www.fike.be

Don Valley Engineering 160737 160737-3-3	Explosion Protection Controller 2	File: 160737-3-3	Drawingnr: 160737-3-3	Revision: -	Dwg. By: Stefaan.Jo
		Date: 4/6/2022	Cabinet type: EPACO MULTI STREAM - 4 STREAMS		Page: 312 # Pages: 84

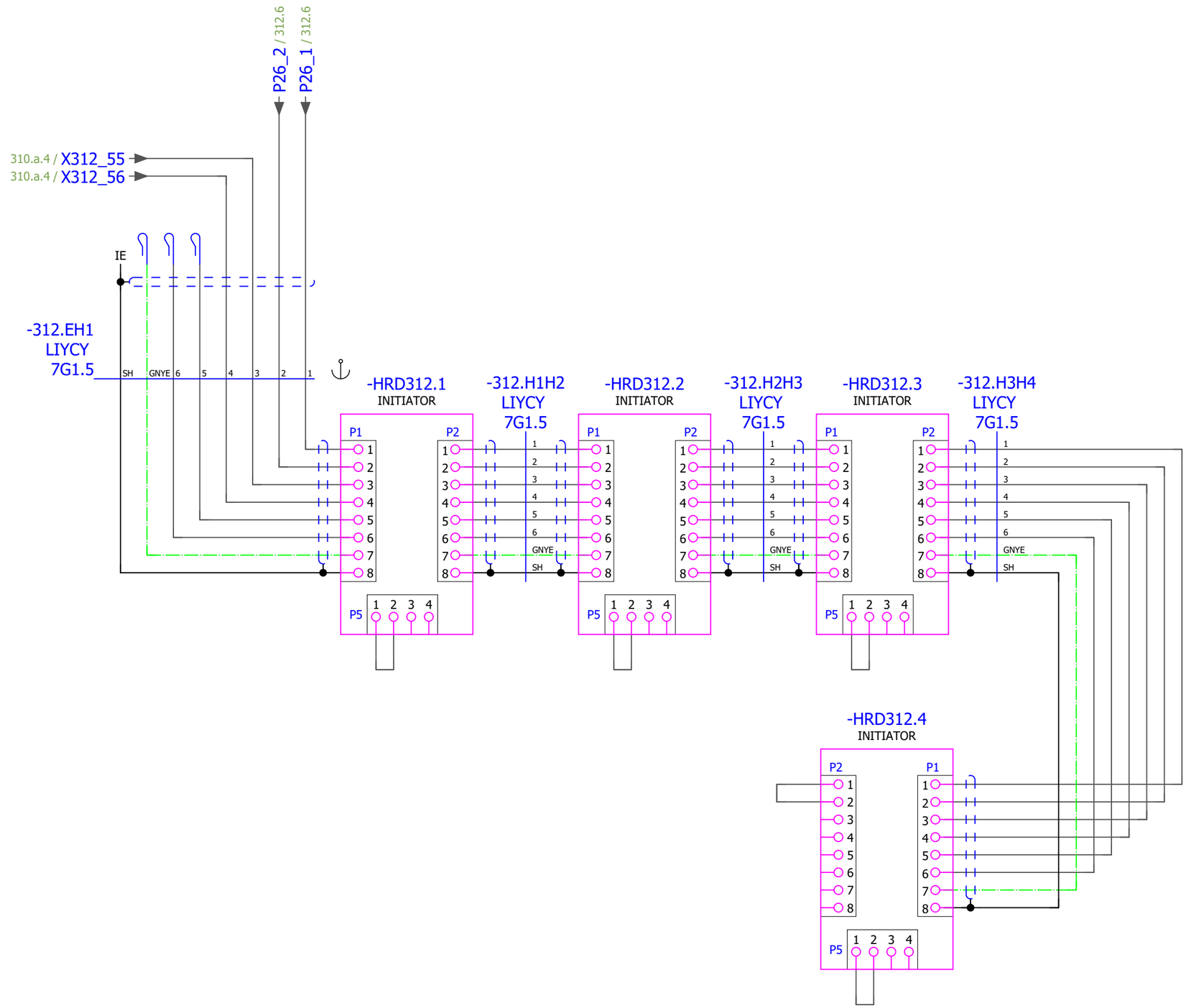

Fike Europe E.v.b.a. · Toekomstlaan 52 · B2200 Herentals · Belgium
Tel.: +32 14 210031 · Fax +32 14 210743
Email: fike-europe@fike.com · website: www.fike.be

Don Valley Engineering
160737
160737-3-3

Explosion Protection Controller 2

File: 160737-3-3	*Drawingnr:* 160737-3-3	*Revision:* -	*Dwg. By:* Stefaan.Jo
Date: 4/6/2022	*Cabinet type:* EPACO MULTI STREAM - 4 STREAMS		Page: 312.b
			# Pages: 84

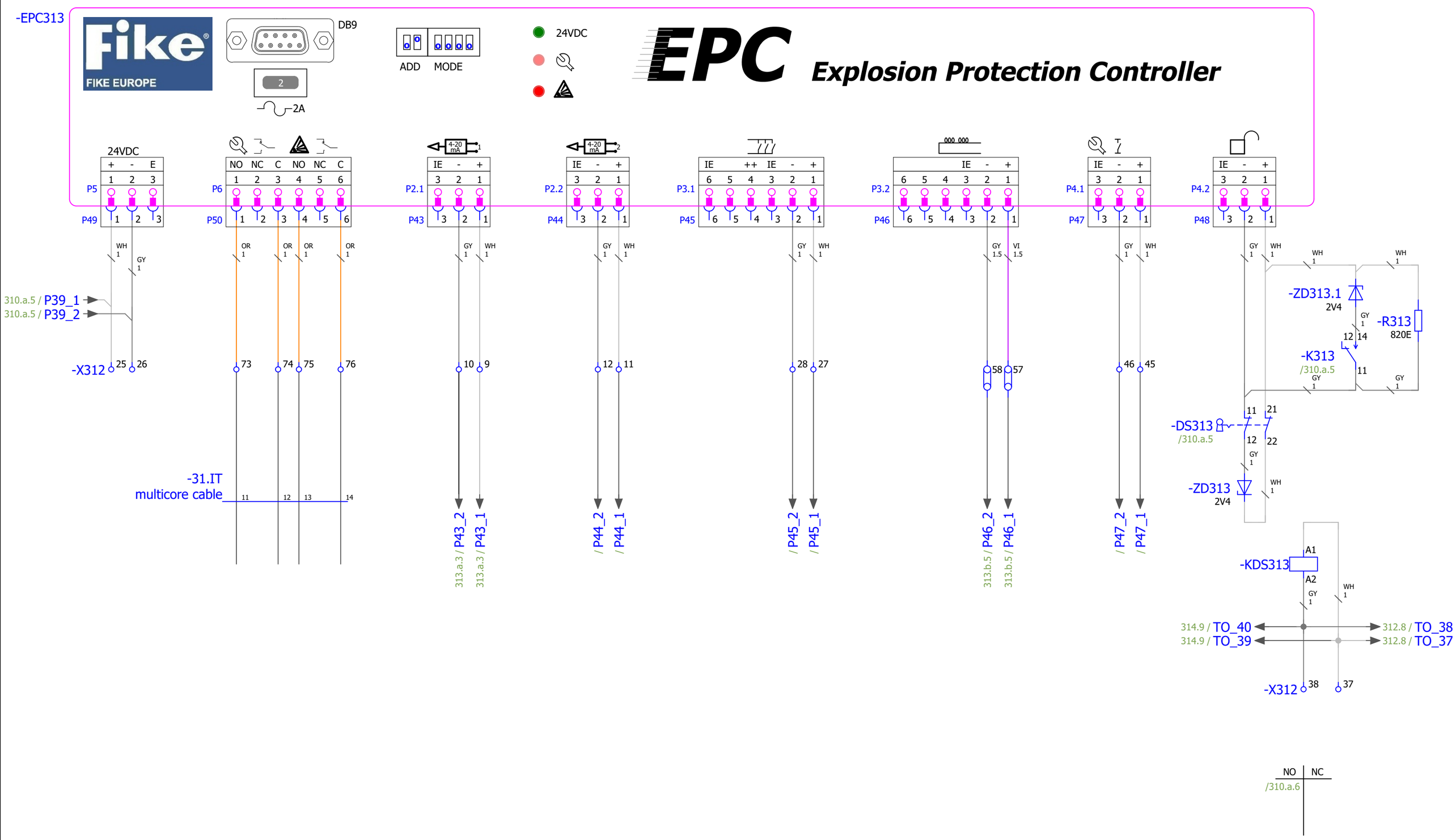

Fike Europe E.v.b.a. · Toekomstlaan 52 · B2200 Herentals · Belgium
Tel. +32 14 210031 · Fax +32 14 210743
Email: fike-europe@fike.com · website: www.fike.be

Don Valley Engineering
160737
160737-3-3

Explosion Protection Controller 3

File:	Drawingnr:	Revision:	Dwg. By:
160737-3-3	160737-3-3	-	Stefaan.Jo
Date: 4/6/2022	Cabinet type: EPACO MULTI STREAM - 4 STREAMS		Page: 313 / # Pages: 84

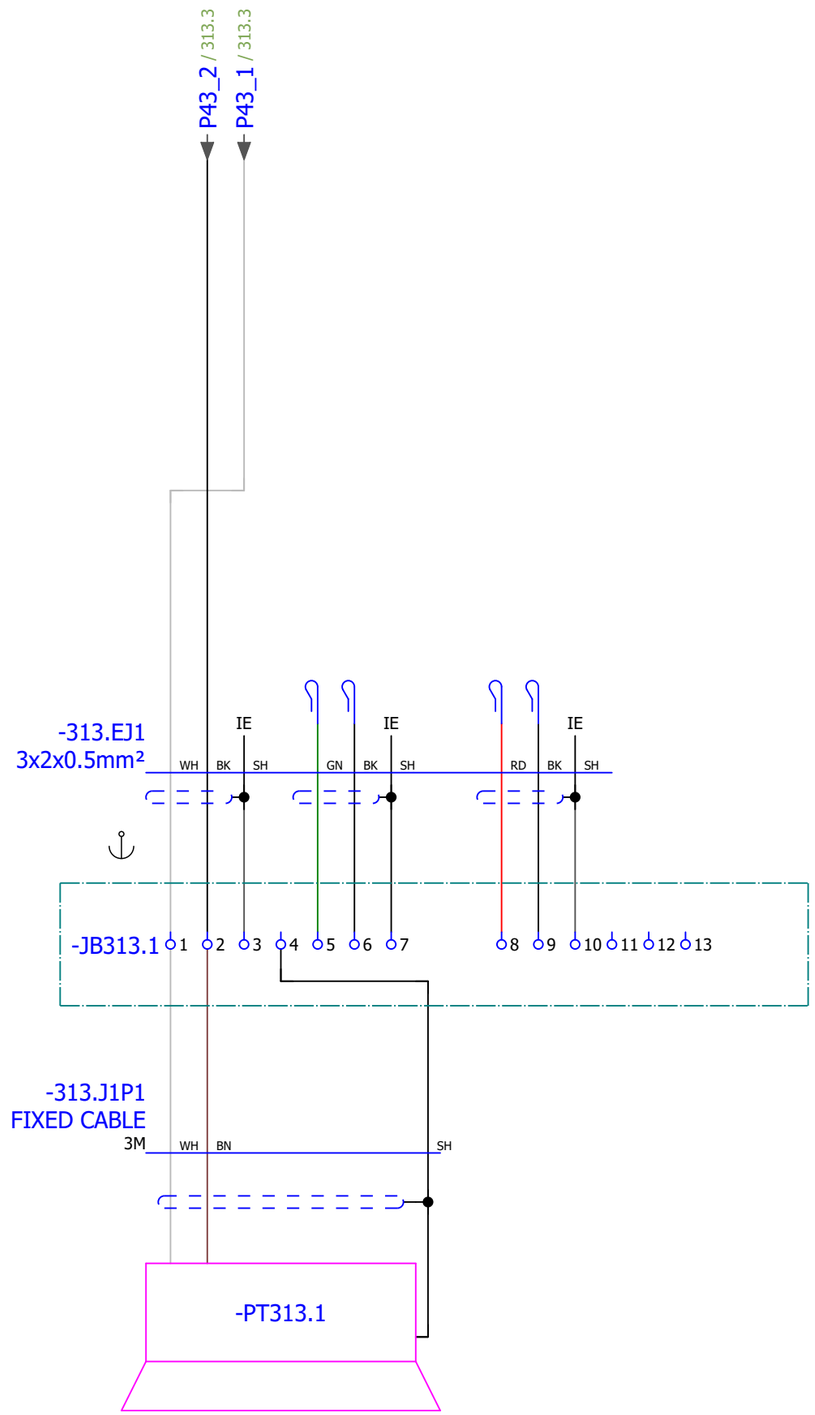

ATTENTION: Do not cut the breather tube from the detector(s) in the junction box

Previous:
313

Next:
313.b

Fike Europe E.v.b.a. · Toekomstlaan 52 · B2200 Herentals · Belgium
Tel. +32 14 210031 · Fax +32 14 210743
Email: fike-europe@fike.com · website: www.fike .be

Don Valley Engineering 160737 160737-3-3	Explosion Protection Controller 3	File: 160737-3-3	Drawingnr: 160737-3-3	Revision: -	Dwg. By: Stefaan.Jo
		Date: 4/6/2022	Cabinet type: EPACO MULTI STREAM - 4 STREAMS		Page: 313.a # Pages: 84

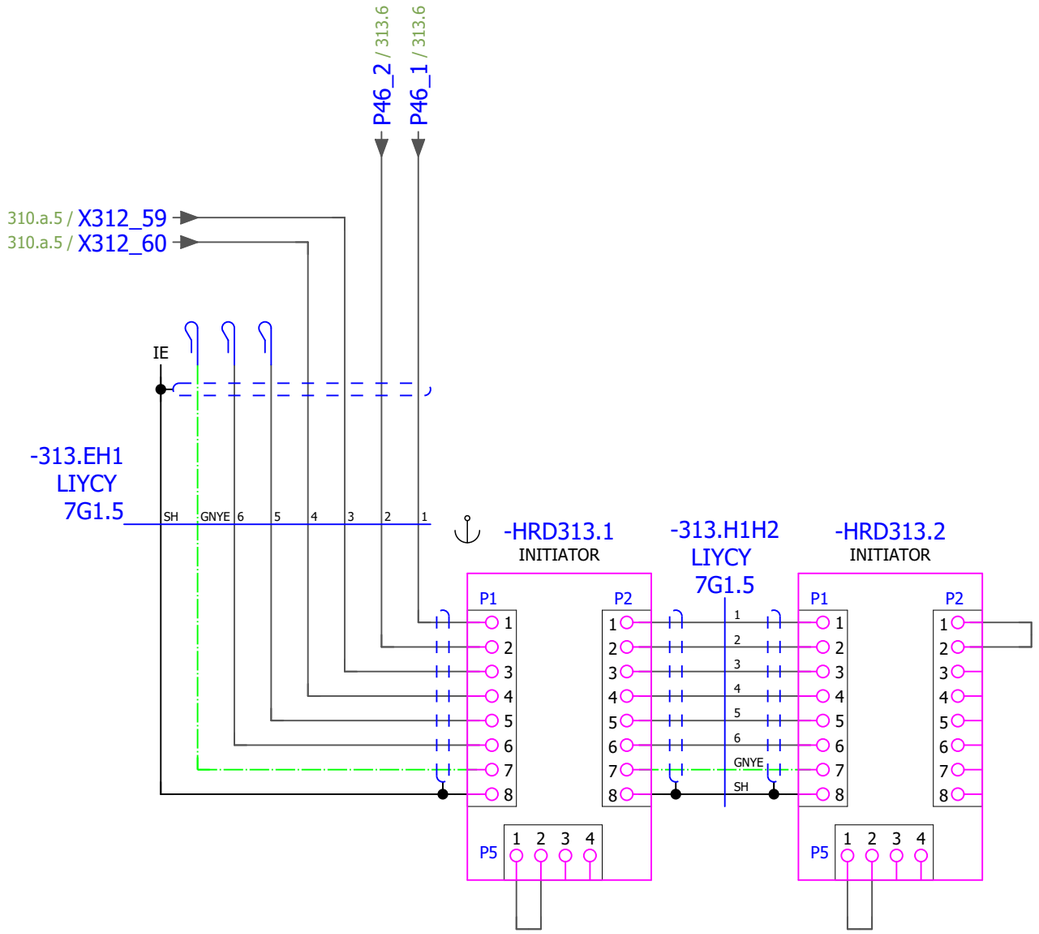

Fike
FIKE EUROPE
Fike Europe E.v.b.a. · Toekomstlaan 52 · B2200 Herentals · Belgium
Tel. +32 14 210031 · Fax +32 14 210743
Email: fike-europe@fike.com · website: www.fike .be

Don Valley Engineering
160737
160737-3-3

Explosion Protection Controller 3

File:	Drawingnr:	Revision:	Dwg. By:
160737-3-3	160737-3-3	-	Stefaan.Jo
Date: 4/6/2022	Cabinet type: EPACO MULTI STREAM - 4 STREAMS		Page: 313.b
			# Pages: 84

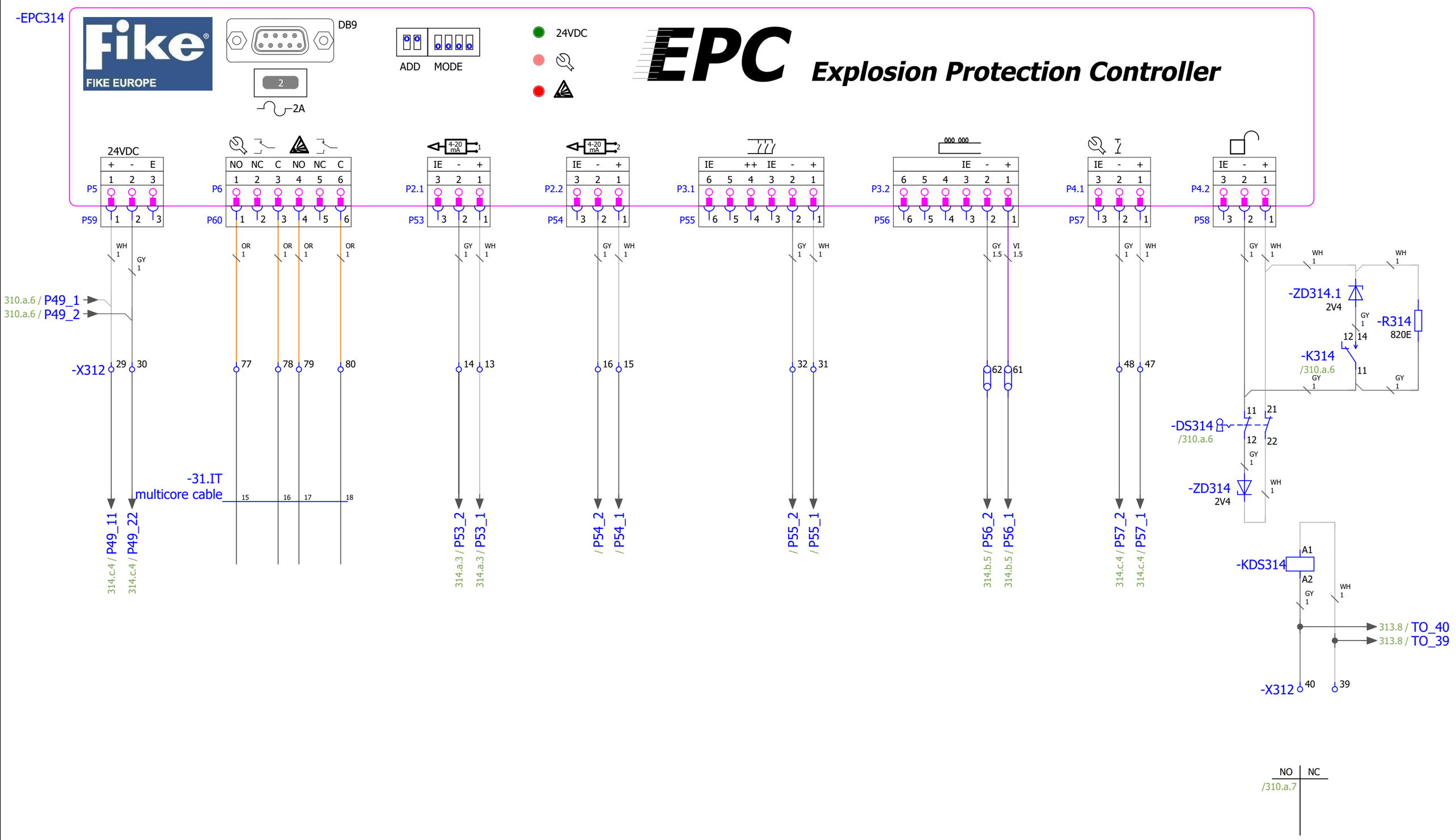

Previous: 313.b

Next: 314.a

Fike Europe E.v.b.a. · Toekomstlaan 52 · B2200 Herentals · Belgium
Tel. +32 14 210031 · Fax +32 14 210743
Email: fike-europe@fike.com · website: www.fike.be

Don Valley Engineering
160737
160737-3-3

Explosion Protection Controller 4

File:	Drawingnr:	Revision:	Dwg. By:
160737-3-3	160737-3-3	-	Stefaan.Jo
Date: 4/6/2022	Cabinet type: EPACO MULTI STREAM - 4 STREAMS		Page: 314 / # Pages: 84

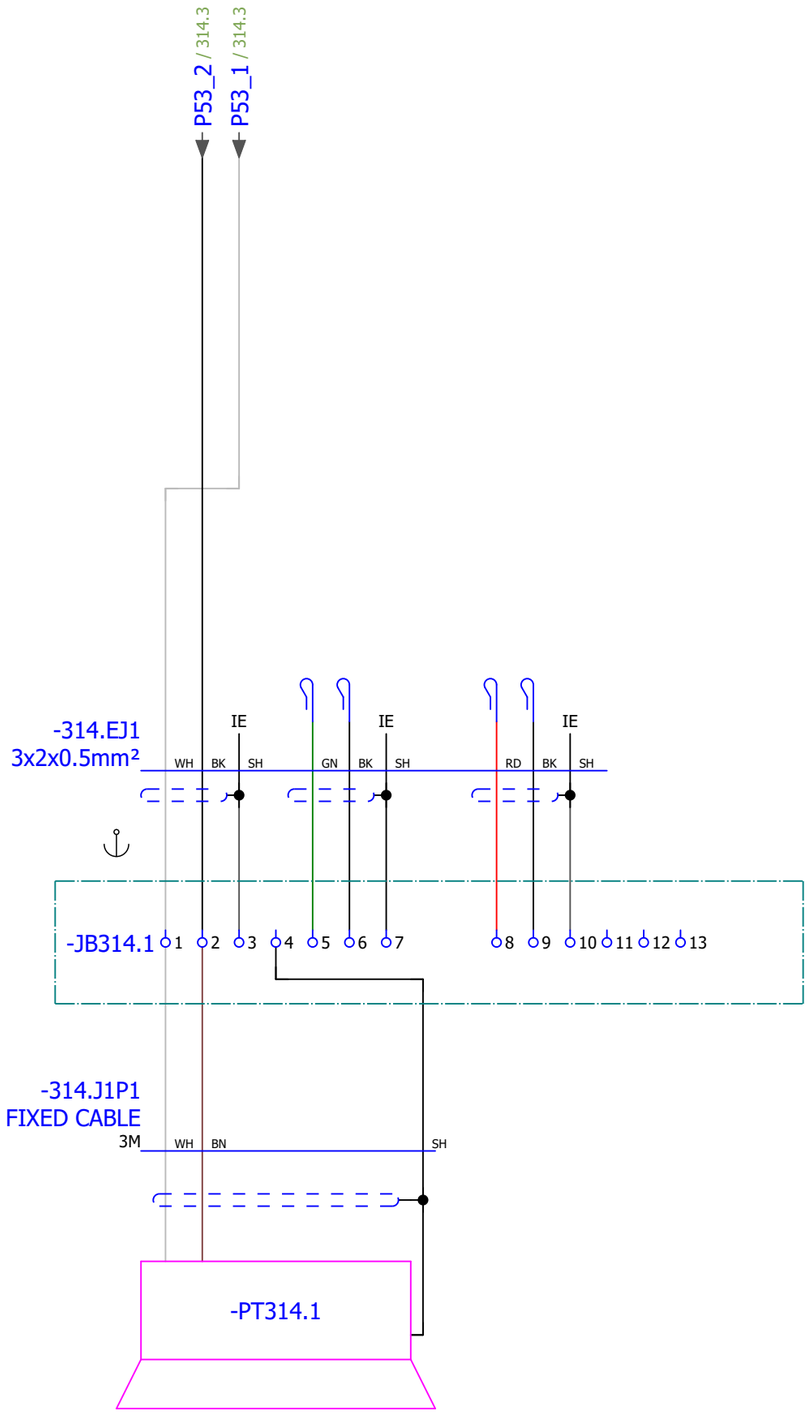

ATTENTION: Do not cut the breather tube from the detector(s) in the junction box

Fike Europe E.v.b.a. · Toekomstlaan 52 · B2200 Herentals · Belgium
Tel. +32 14 210031 · Fax +32 14 210743
Email: fike-europe@fike.com · website: www.fike .be

Don Valley Engineering
160737
160737-3-3

Explosion Protection Controller 4

File: 160737-3-3	*Drawingnr:* 160737-3-3	*Revision:* -	*Dwg. By:* Stefaan.Jo
Date: 4/6/2022	*Cabinet type:* EPACO MULTI STREAM - 4 STREAMS		Page: 314.a
			# Pages: 84

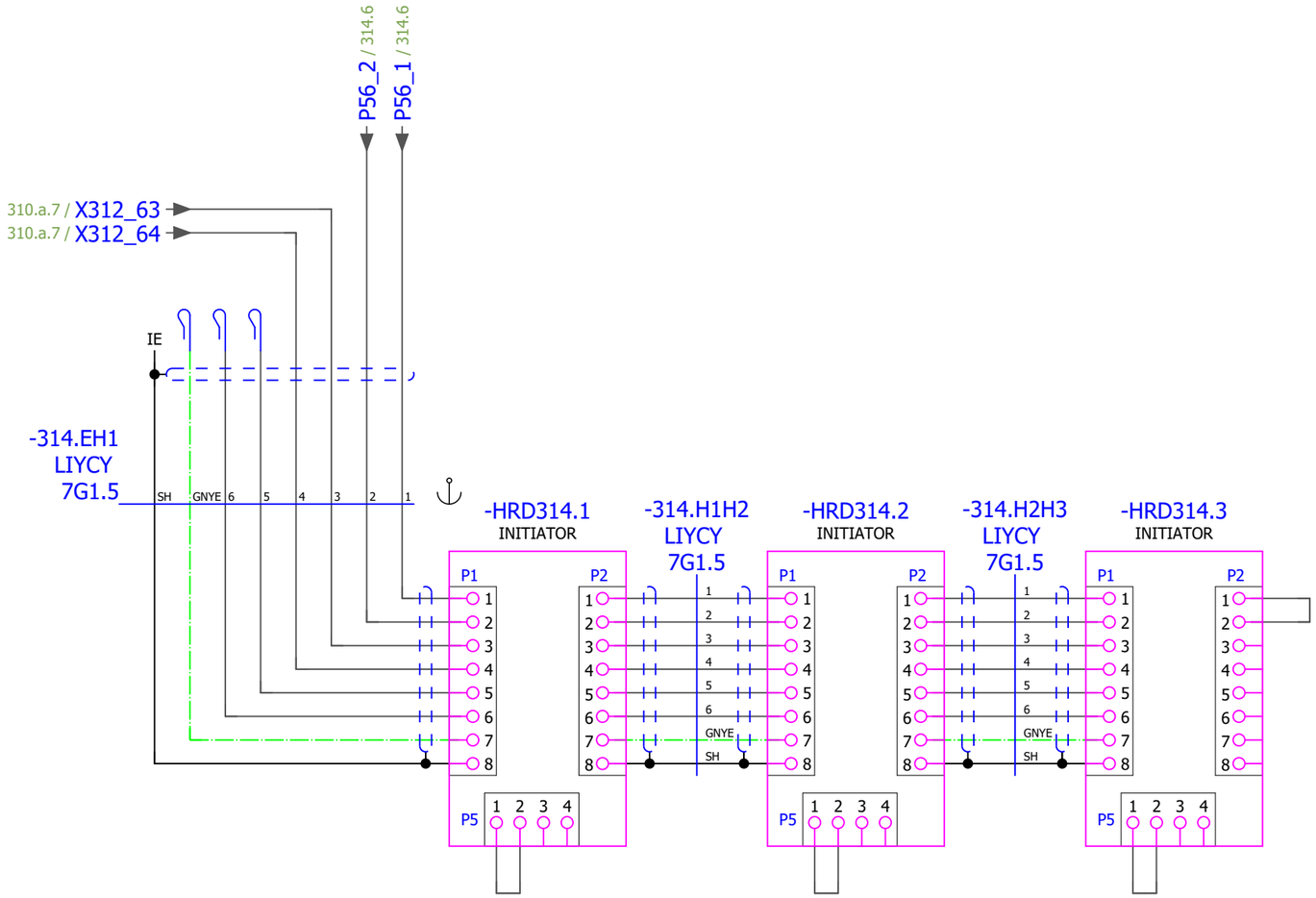

Previous:
314.a

Next:
314.c

Fike
FIKE EUROPE
Fike Europe E.v.b.a. · Toekomstlaan 52 · B2200 Herentals · Belgium
Tel. +32 14 210031 · Fax +32 14 210743
Email: fike-europe@fike.com · website: www.fike .be

Don Valley Engineering
160737
160737-3-3

Explosion Protection Controller 4

File:	Drawingnr:	Revision:	Dwg. By:
160737-3-3	160737-3-3	-	Stefaan.Jo
Date: 4/6/2022	Cabinet type: EPACO MULTI STREAM - 4 STREAMS		Page: 314.b
			# Pages: 84

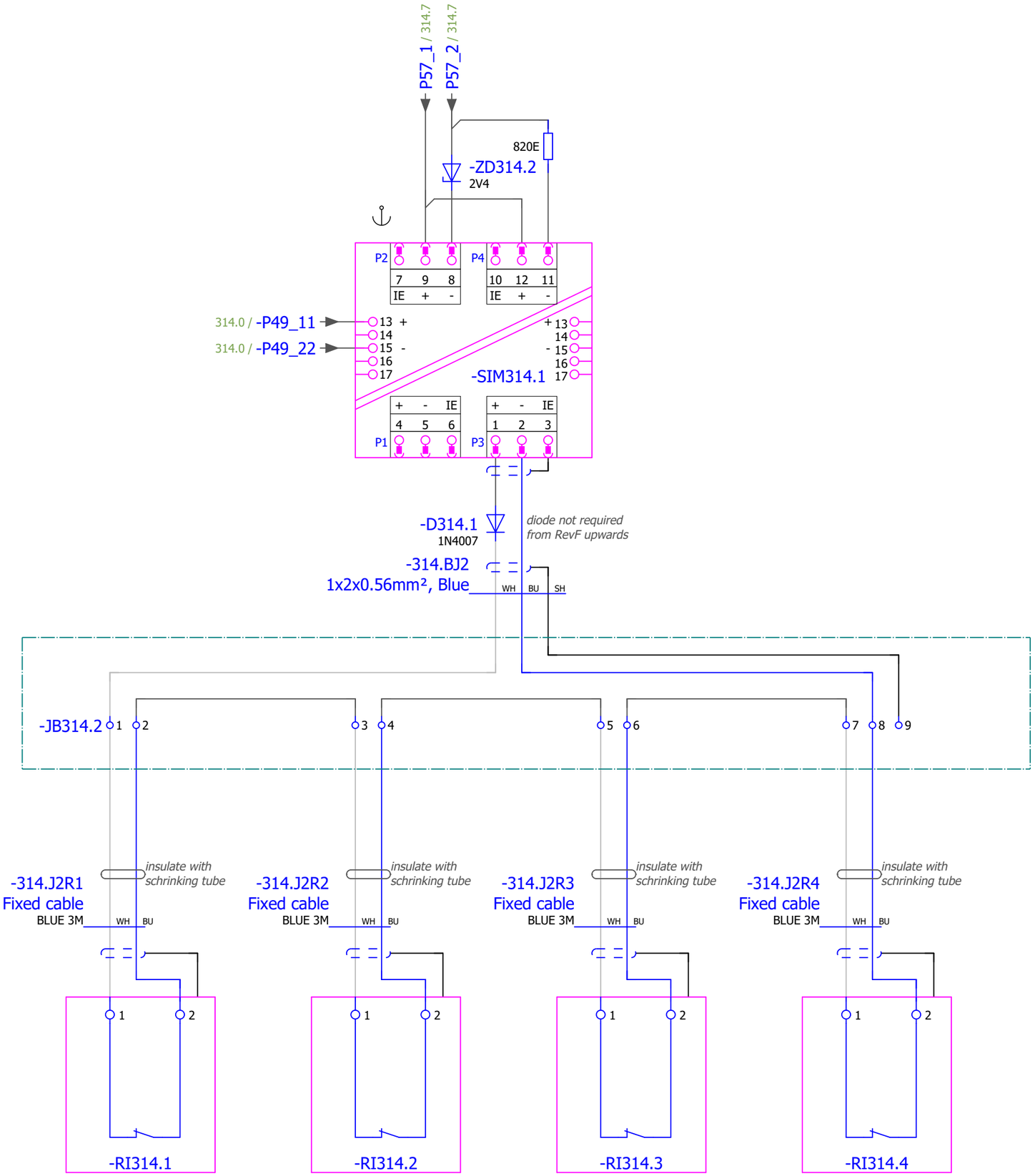

Previous:
314.b

Next:
315

Fike
FIKE EUROPE
Fike Europe E.v.b.a. · Toekomstlaan 52 · B2200 Herentals · Belgium
Tel. +32 14 210031 · Fax +32 14 210743
Email: fike-europe@fike.com · website: www.fike.be

Don Valley Engineering
160737
160737-3-3

Explosion Protection Controller 4

File:	Drawingnr:	Revision:	Dwg. By:
160737-3-3	160737-3-3	-	Stefaan.Jo
Date: 4/6/2022	Cabinet type: EPACO MULTI STREAM - 4 STREAMS		Page: 314.c
			# Pages: 84

-RC831
/317.8

RC8 Relay Contact module

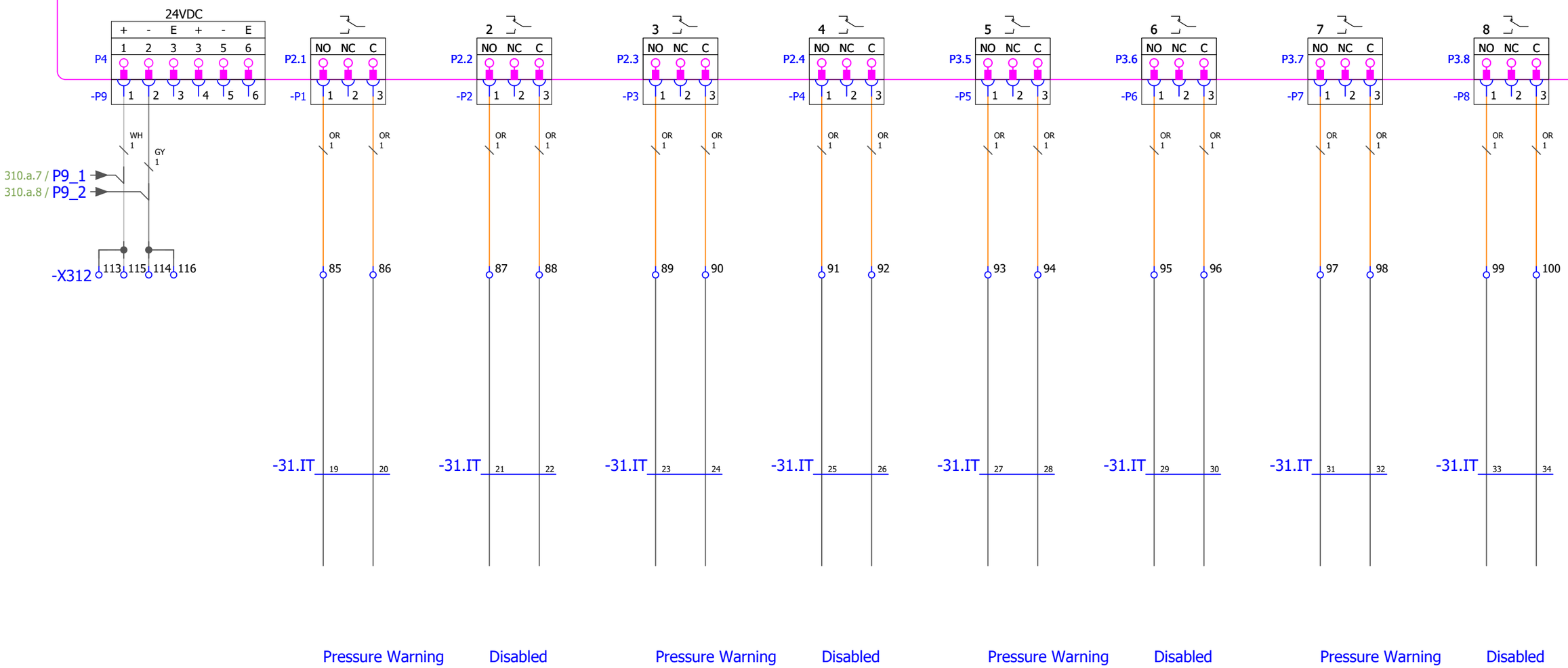

Previous:
314.c

Next:
316

Fike Europe E.v.b.a. · Toekomstlaan 52 · B2200 Herentals · Belgium
Tel. +32 14 210031 · Fax +32 14 210743
Email: fike-europe@fike.com · website: www.fike.be

Don Valley Engineering 160737 160737-3-3	RC8	File: 160737-3-3	Drawingnr: 160737-3-3	Revision: -	Dwg. By: Stefaan.Jo
		Date: 4/6/2022	Cabinet type: EPACO MULTI STREAM - 4 STREAMS		Page: 315 # Pages: 84

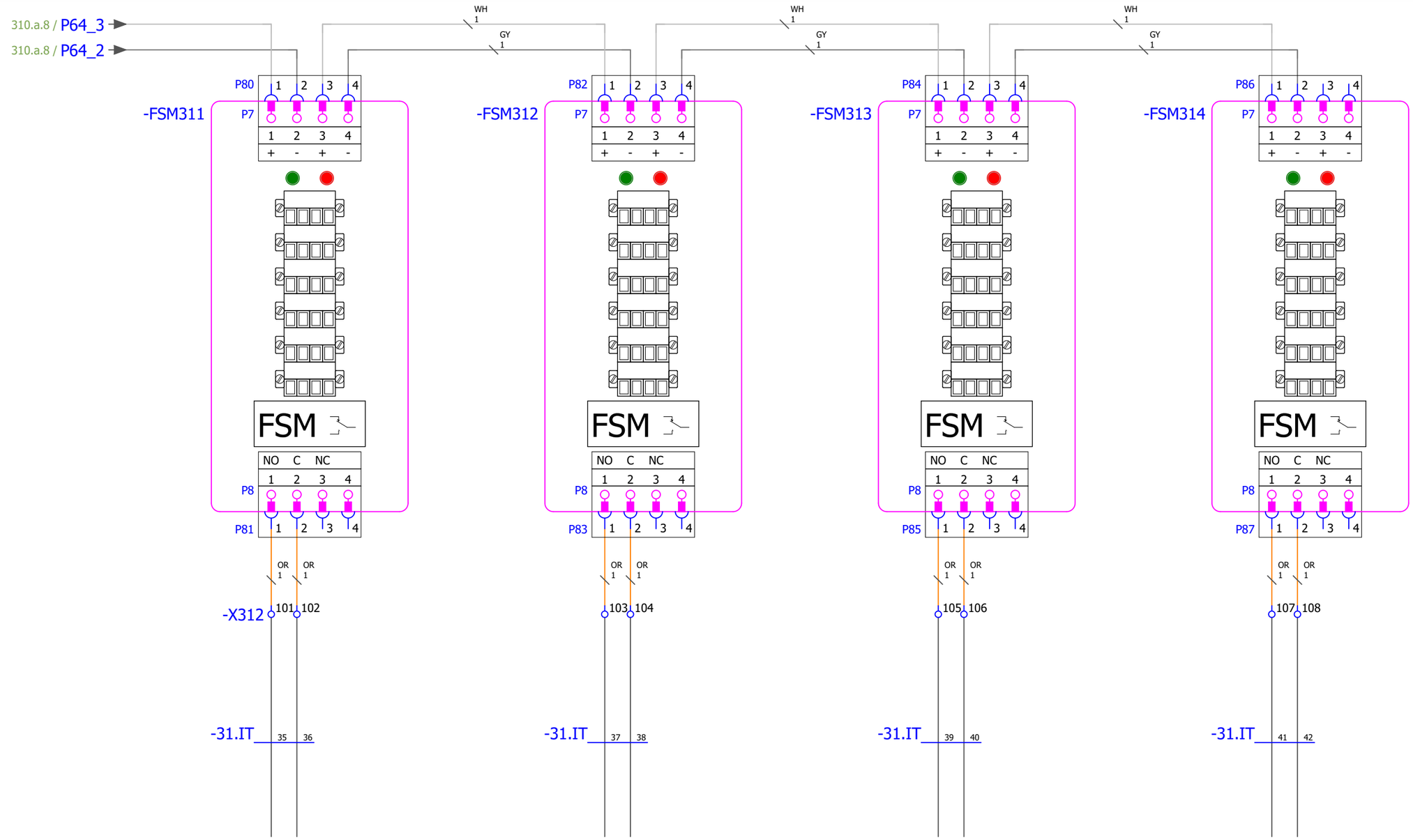

Fike Europe E.v.b.a. · Toekomstlaan 52 · B2200 Herentals · Belgium
Tel. +32 14 210031 · Fax +32 14 210743
Email: fike-europe@fike.com · website: www.fike.be

Don Valley Engineering
160737
160737-3-3

Fike Simulator Module

File:	Drawingnr:	Revision:	Dwg. By:
160737-3-3	160737-3-3	-	Stefaan.Jo
Date: 4/6/2022	Cabinet type: EPACO MULTI STREAM - 4 STREAMS		Page: 316 / # Pages: 84

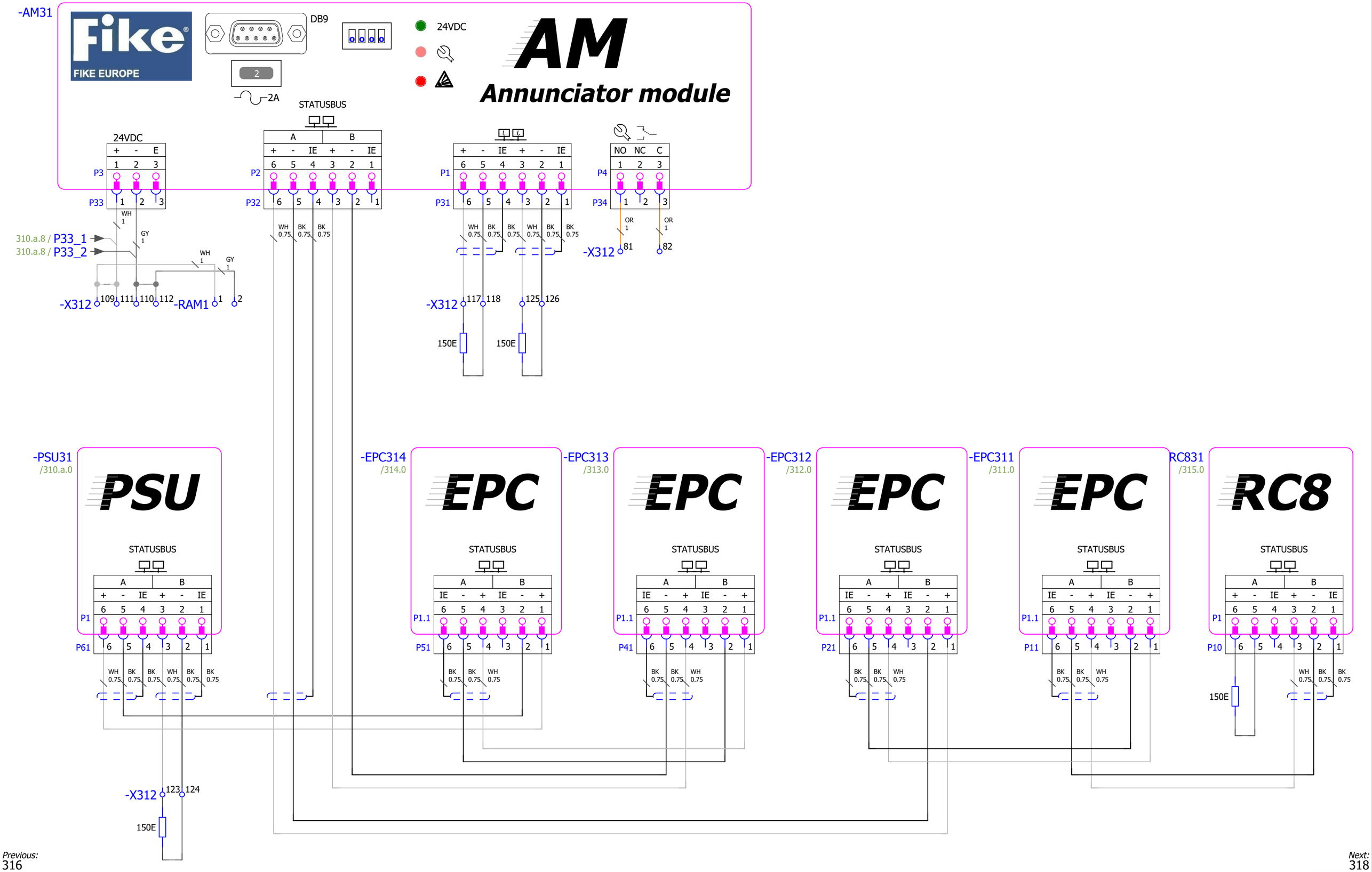

Previous: 316

Next: 318

Fike Europe E.v.b.a. · Toekomstlaan 52 · B2200 Herentals · Belgium
Tel. +32 14 210031 · Fax +32 14 210743
Email: fike-europe@fike.com · website: www.fike.be

Don Valley Engineering
160737
160737-3-3

Status Bus

File:	Drawingnr:	Revision:	Dwg. By:
160737-3-3	160737-3-3	-	Stefaan.Jo
Date: 4/6/2022	Cabinet type: EPACO MULTI STREAM - 4 STREAMS		Page: 317
			# Pages: 84

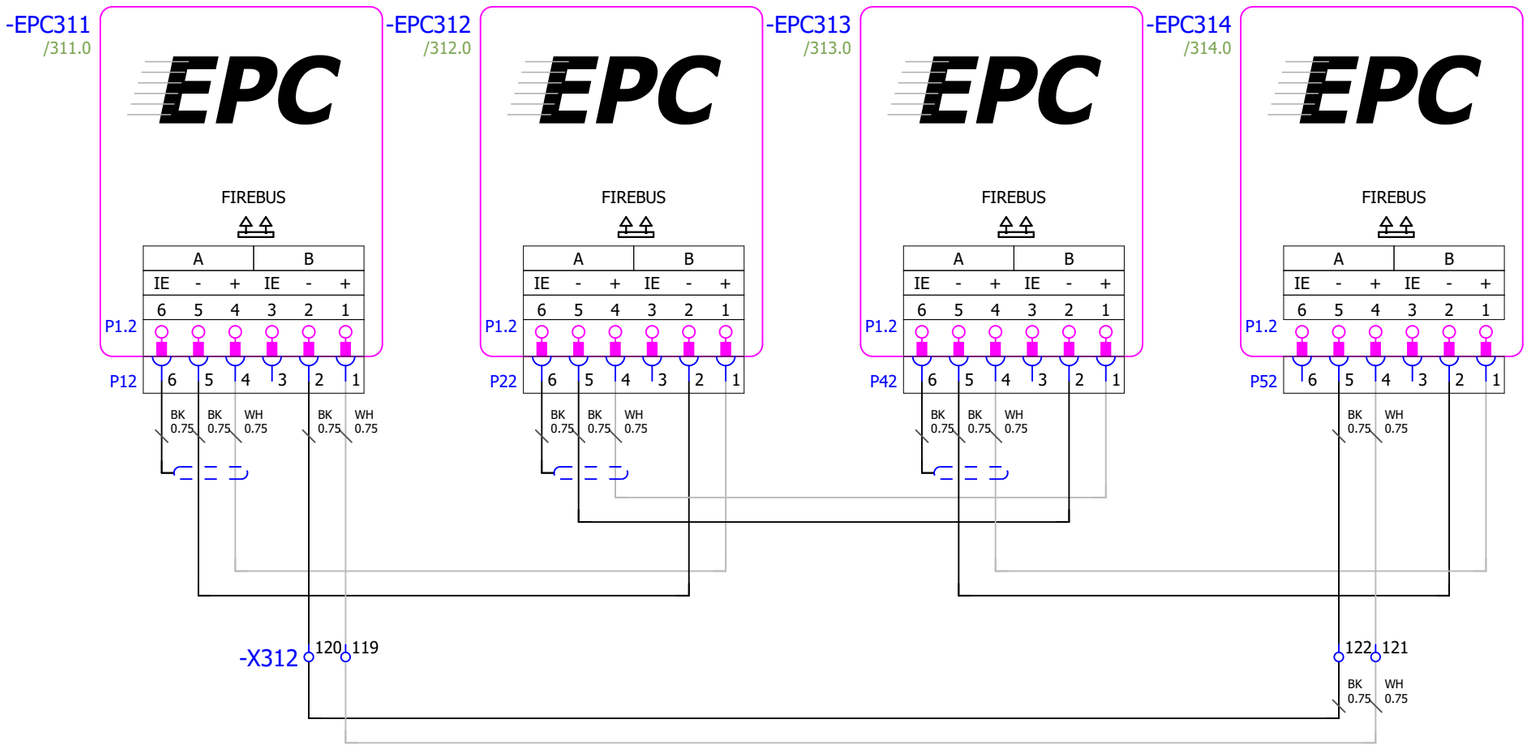

Previous:
317

Next:
+STREAM2/320.a

Fike
FIKE EUROPE
Fike Europe E.v.b.a. · Toekomstlaan 52 · B2200 Herentals · Belgium
Tel. +32 14 210031 · Fax +32 14 210743
Email: fike-europe@fike.com · website: www.fike.be

Don Valley Engineering
160737
160737-3-3

Fire Bus

File:	Drawingnr:	Revision:	Dwg. By:
160737-3-3	160737-3-3	-	Stefaan.Jo
Date: 4/6/2022	Cabinet type: EPACO MULTI STREAM - 4 STREAMS		Page: 318
			# Pages: 84

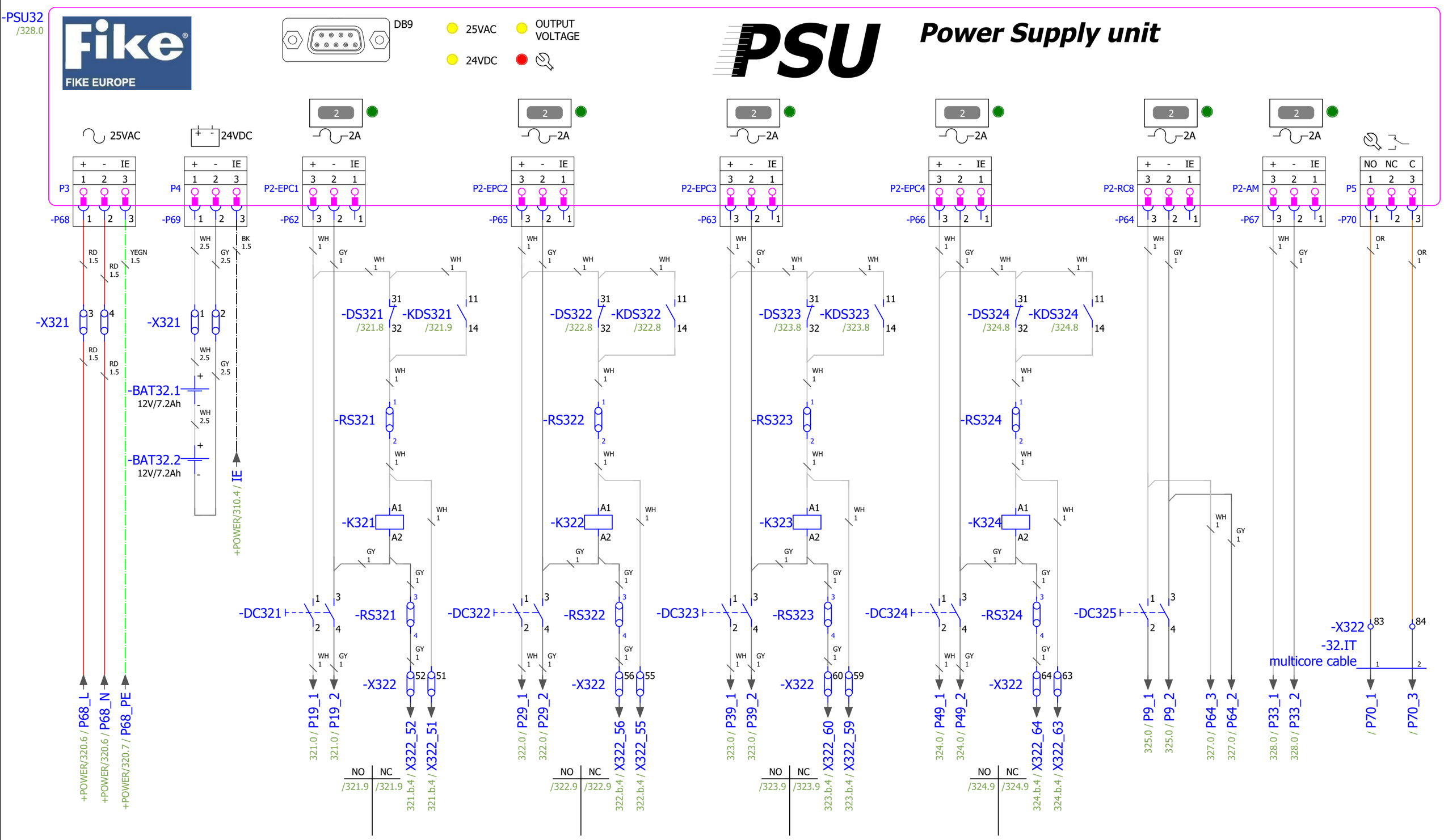

Previous:
+STREAM1/318

Next:
321

Fike Europe E.v.b.a. · Toekomstlaan 52 · B2200 Herentals · Belgium
Tel. +32 14 210031 · Fax +32 14 210743
Email: fike-europe@fike.com · website: www.fike.be

Don Valley Engineering
160737
160737-3-3

Power Supply Unit 1

File:	Drawingnr:	Revision:	Dwg. By:
160737-3-3	160737-3-3	-	Stefaan.Jo
Date: 4/6/2022	Cabinet type: EPACO MULTI STREAM - 4 STREAMS		Page: 320.a
			# Pages: 84

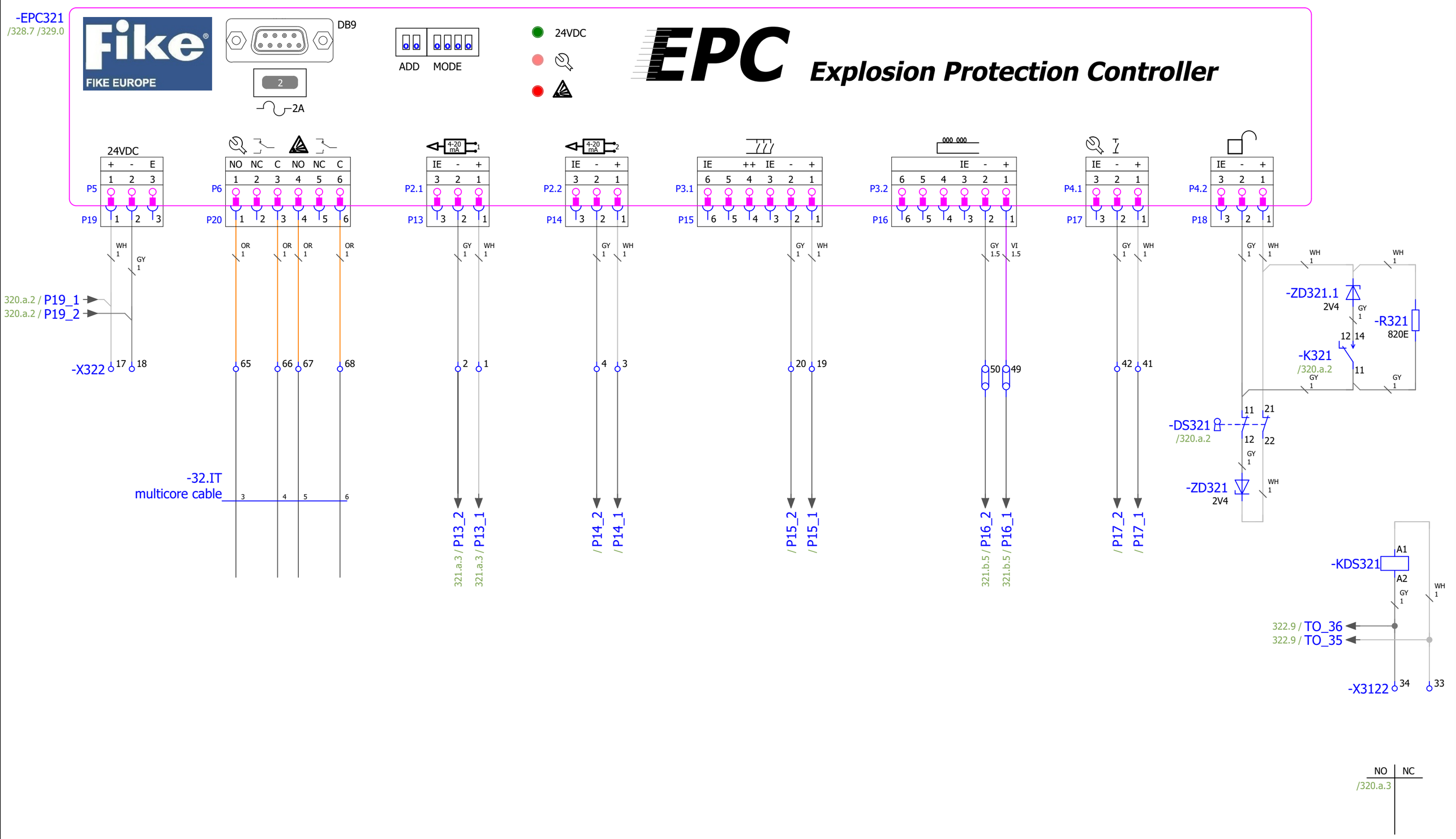

Previous:
320.a

Next:
321.a

Fike Europe E.v.b.a. · Toekomstlaan 52 · B2200 Herentals · Belgium
Tel. +32 14 210031 · Fax +32 14 210743
Email: fike-europe@fike.com · website: www.fike.be

Don Valley Engineering
160737
160737-3-3

Explosion Protection Controller 1

File:	Drawingnr:	Revision:	Dwg. By:
160737-3-3	160737-3-3	-	Stefaan.Jo
Date: 4/6/2022	Cabinet type: EPACO MULTI STREAM - 4 STREAMS		Page: 321 / # Pages: 84

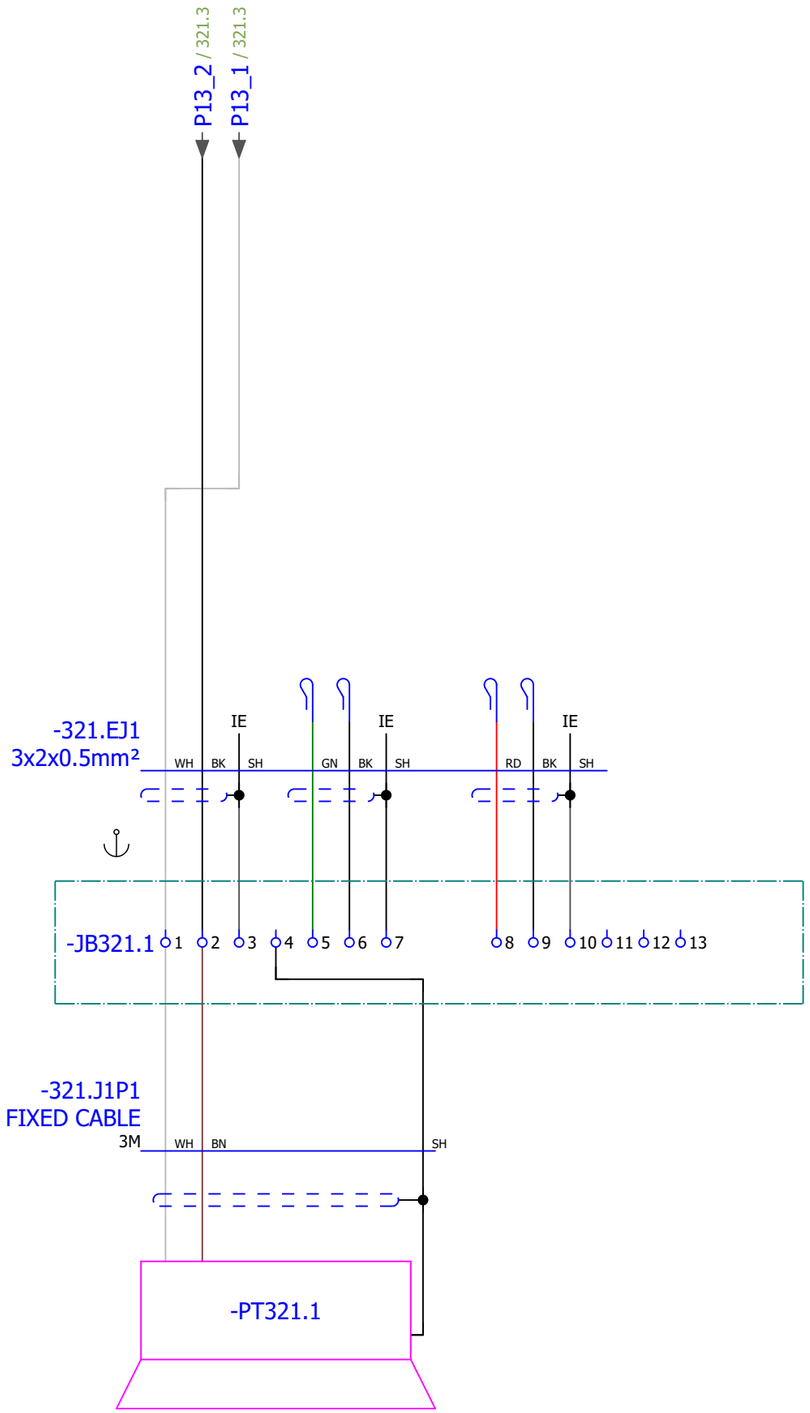

ATTENTION: Do not cut the breather tube from the detector(s) in the junction box

Previous:
321

Next:
321.b

Fike Europe E.v.b.a. · Toekomstlaan 52 · B2200 Herentals · Belgium
Tel. +32 14 210031 · Fax +32 14 210743
Email: fike-europe@fike.com · website: www.fike .be

Don Valley Engineering
160737
160737-3-3

Explosion Protection Controller 1

File:	Drawingnr:	Revision:	Dwg. By:
160737-3-3	160737-3-3	-	Stefaan.Jo
Date: 4/6/2022	Cabinet type: EPACO MULTI STREAM - 4 STREAMS		Page: 321.a
			# Pages: 84

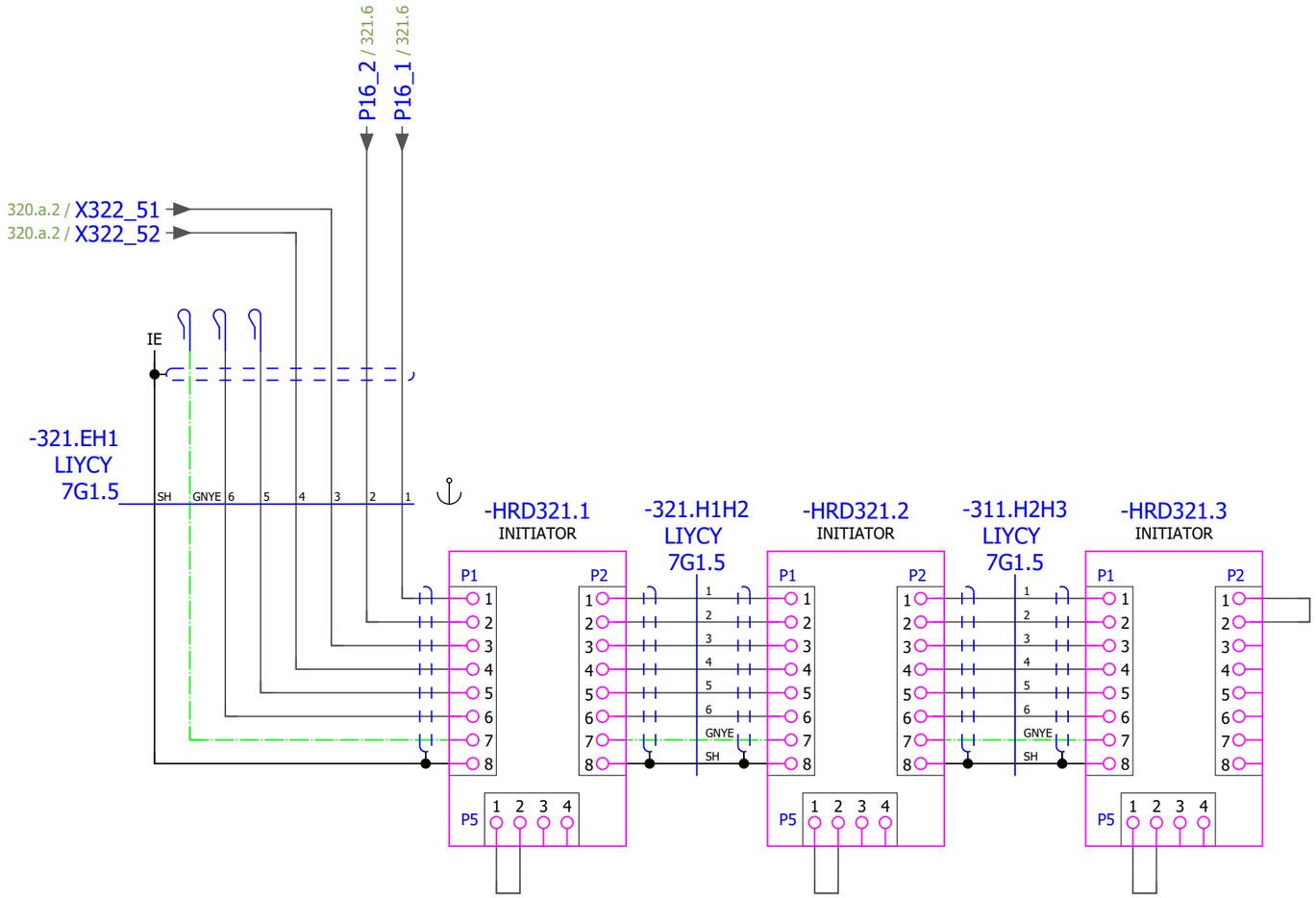

Previous:
321.a

Next:
322

Fike
FIKE EUROPE
Fike Europe E.v.b.a. · Toekomstlaan 52 · B2200 Herentals · Belgium
Tel. +32 14 210031 · Fax +32 14 210743
Email: fike-europe@fike.com · website: www.fike .be

Don Valley Engineering
160737
160737-3-3

Explosion Protection Controller 1

File:	Drawingnr:	Revision:	Dwg. By:
160737-3-3	160737-3-3	-	Stefaan.Jo
Date: 4/6/2022	Cabinet type: EPACO MULTI STREAM - 4 STREAMS		Page: 321.b
			# Pages: 84

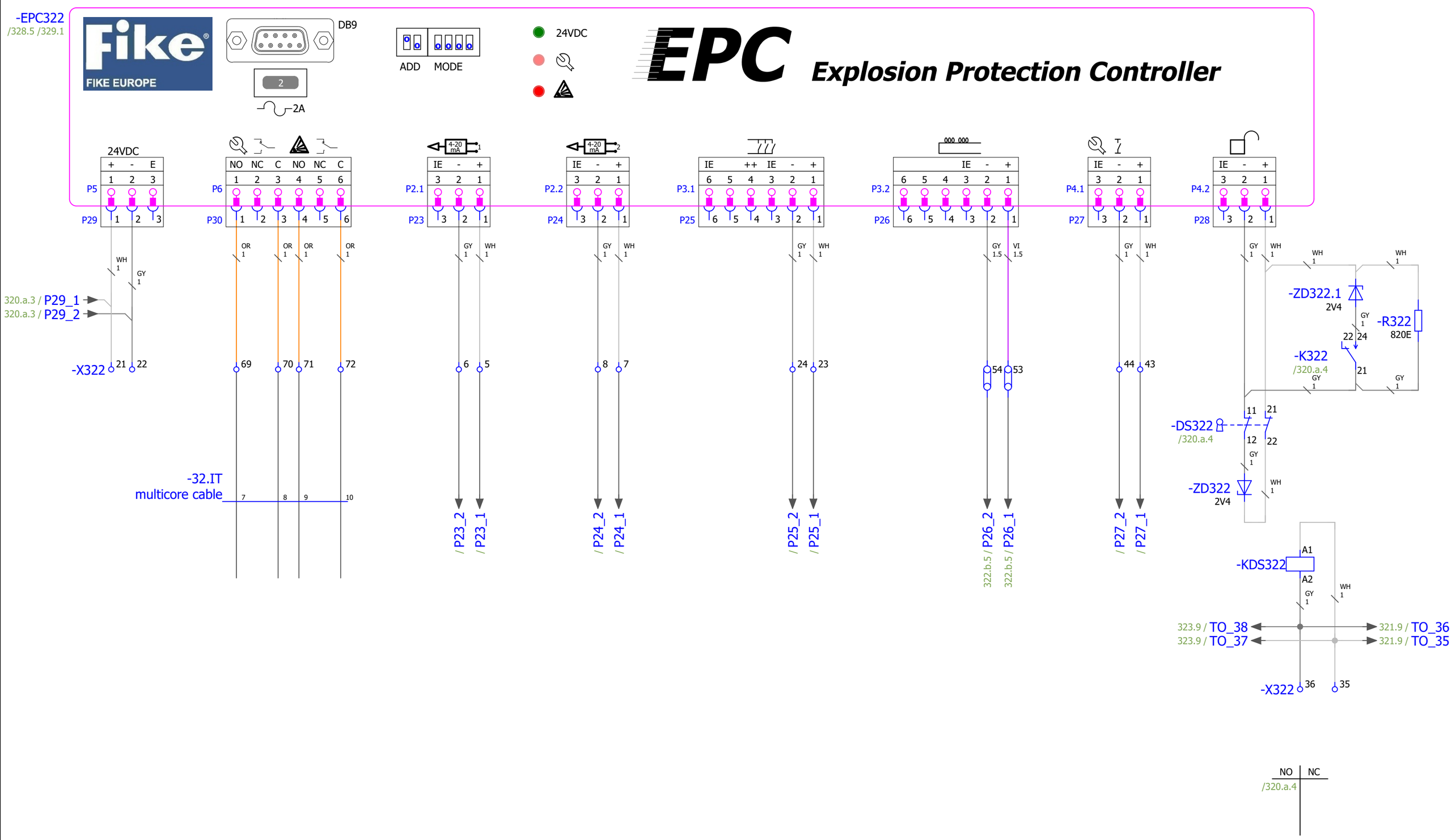

Fike Europe E.v.b.a. · Toekomstlaan 52 · B2200 Herentals · Belgium
Tel. +32 14 210031 · Fax +32 14 210743
Email: fike-europe@fike.com · website: www.fike.be

Don Valley Engineering 160737 160737-3-3	Explosion Protection Controller 2	File: 160737-3-3	Drawingnr: 160737-3-3	Revision: -	Dwg. By: Stefaan.Jo
		Date: 4/6/2022	Cabinet type: EPACO MULTI STREAM - 4 STREAMS		Page: 322 # Pages: 84

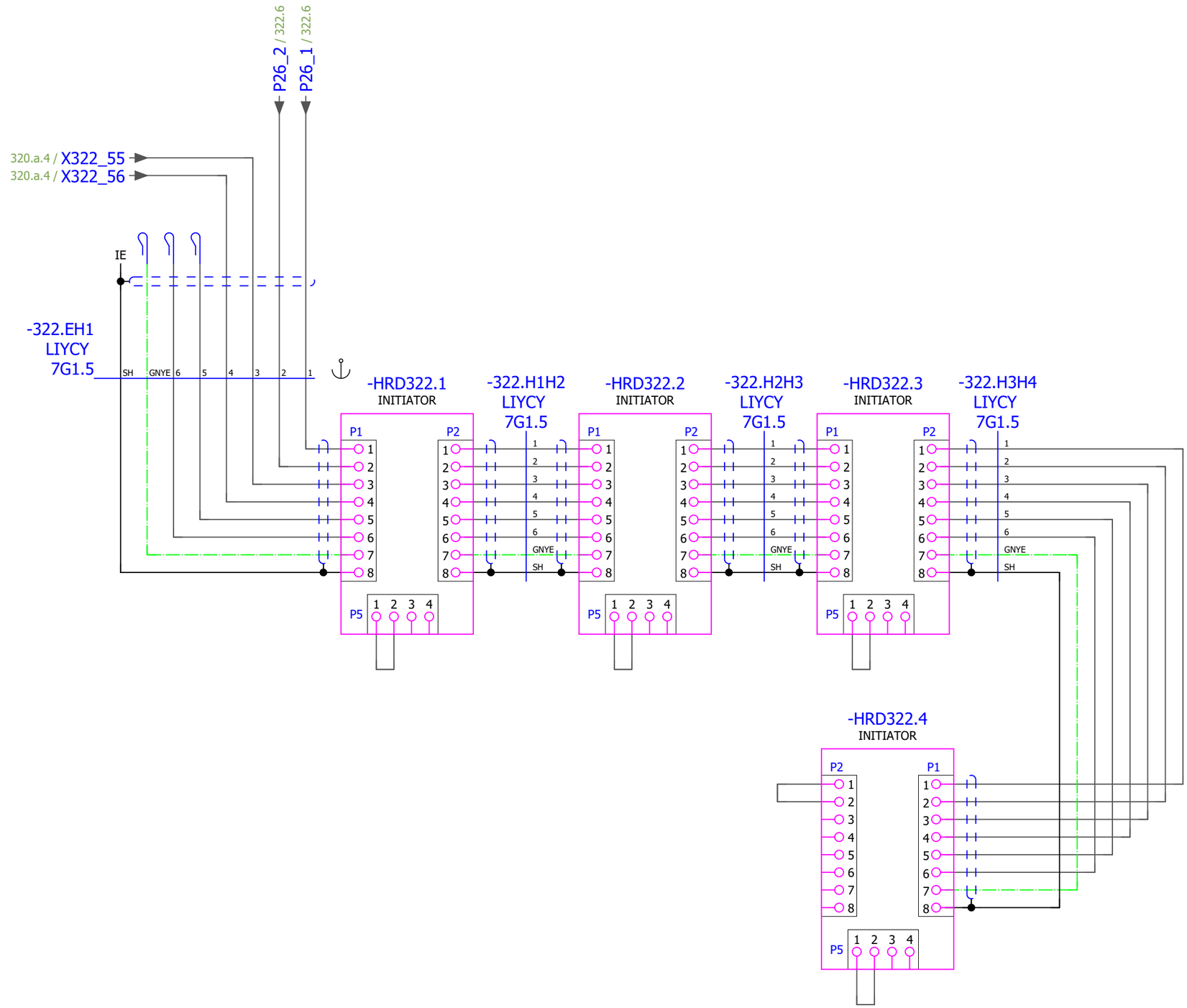

Previous:
322

Next:
323

Fike
FIKE EUROPE
Fike Europe E.v.b.a. · Toekomstlaan 52 · B2200 Herentals · Belgium
Tel.: +32 14 210031 · Fax +32 14 210743
Email: fike-europe@fike.com · website: www.fike.be

Don Valley Engineering
160737
160737-3-3

Explosion Protection Controller 2

File:	Drawingnr:	Revision:	Dwg. By:
160737-3-3	160737-3-3	-	Stefaan.Jo
Date: 4/6/2022	Cabinet type: EPACO MULTI STREAM - 4 STREAMS		Page: 322.b
			# Pages: 84

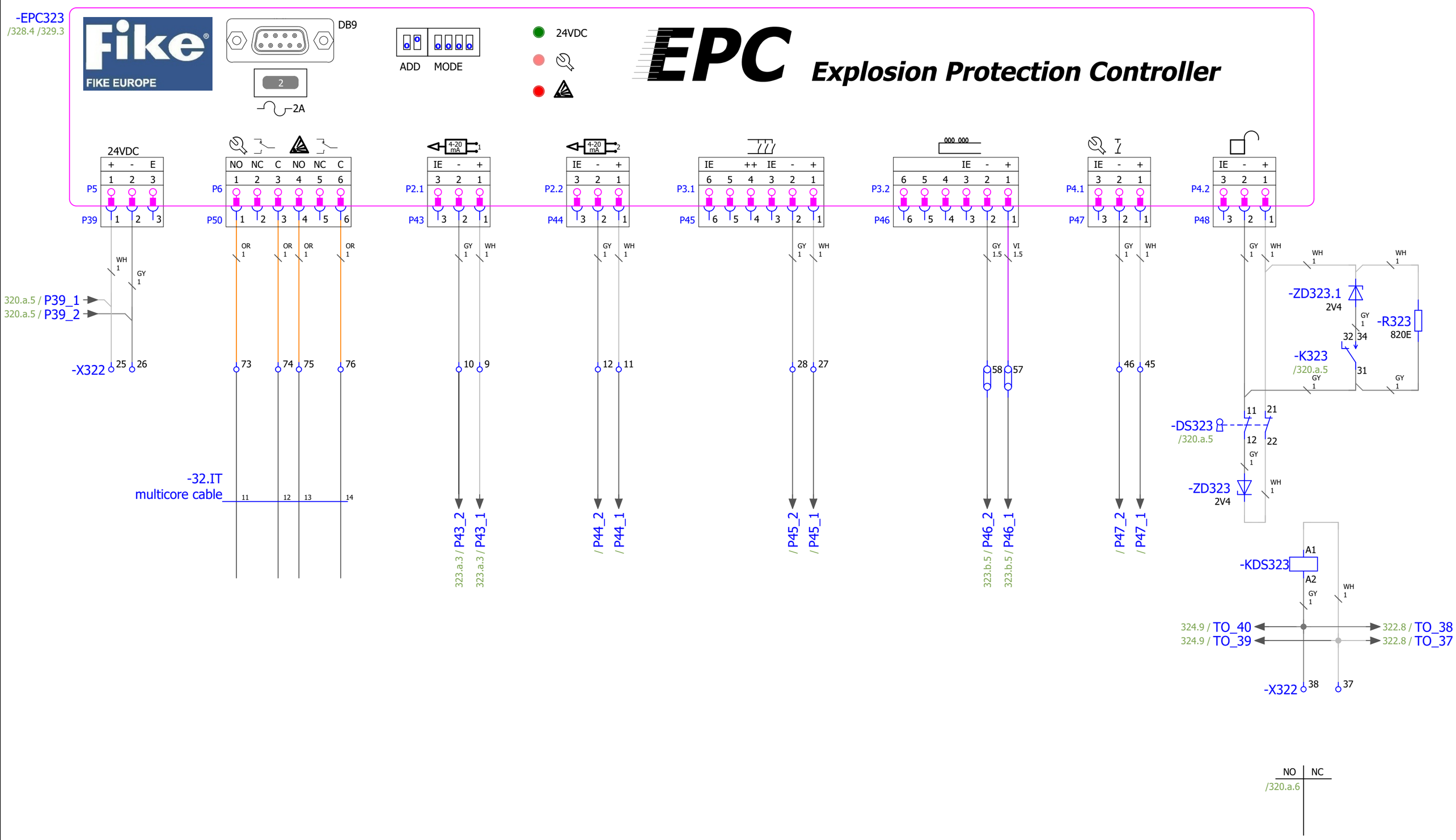

Previous:
322.b

Next:
323.a

Fike Europe E.v.b.a. · Toekomstlaan 52 · B2200 Herentals · Belgium
Tel. +32 14 210031 · Fax +32 14 210743
Email: fike-europe@fike.com · website: www.fike.be

Don Valley Engineering
160737
160737-3-3

Explosion Protection Controller 3

File:	Drawingnr:	Revision:	Dwg. By:
160737-3-3	160737-3-3	-	Stefaan.Jo
Date: 4/6/2022	Cabinet type: EPACO MULTI STREAM - 4 STREAMS		Page: 323 / # Pages: 84

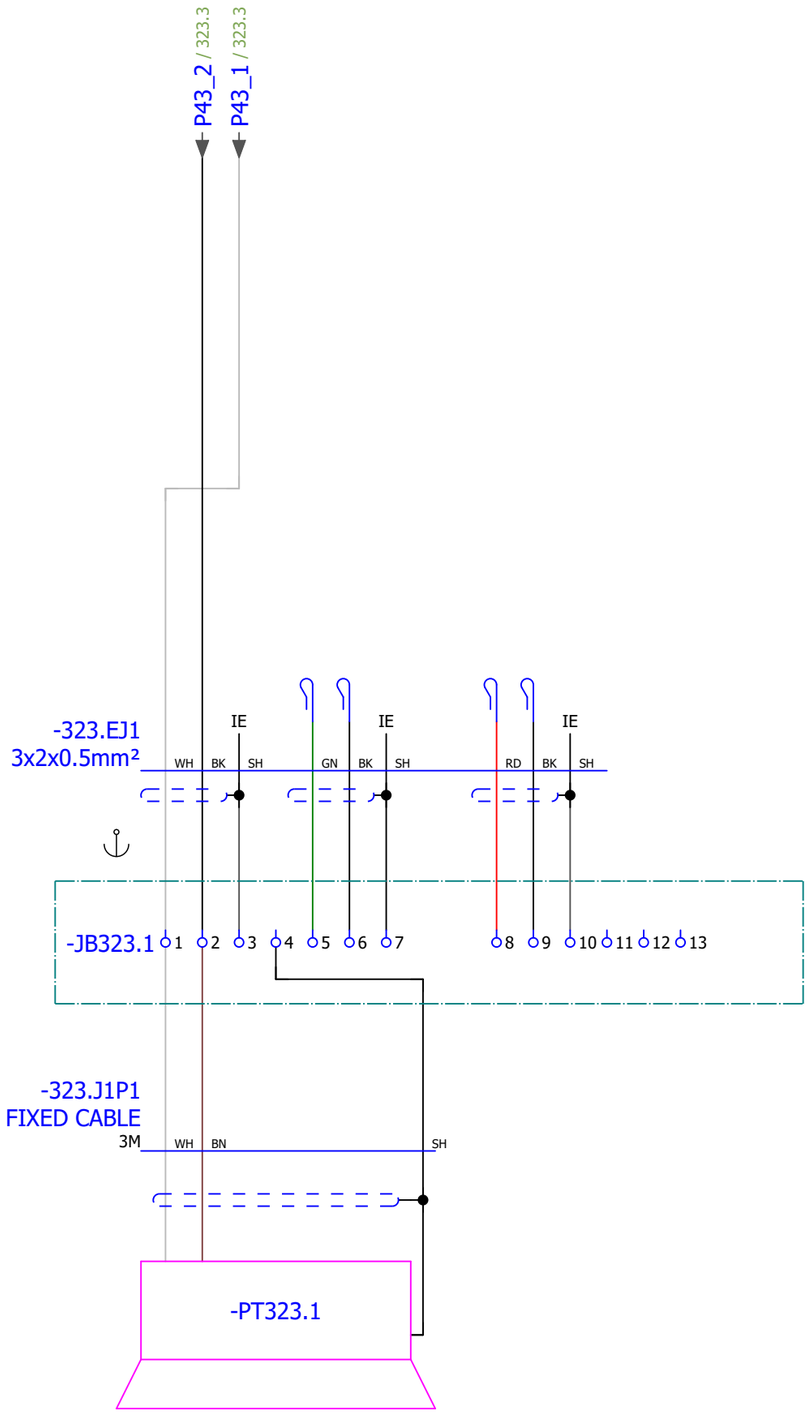

ATTENTION: Do not cut the breather tube from the detector(s) in the junction box

Fike Europe E.v.b.a. · Toekomstlaan 52 · B2200 Herentals · Belgium
Tel. +32 14 210031 · Fax +32 14 210743
Email: fike-europe@fike.com · website: www.fike .be

Don Valley Engineering 160737 160737-3-3	Explosion Protection Controller 3	File: 160737-3-3	Drawingnr: 160737-3-3	Revision: -	Dwg. By: Stefaan.Jo
		Date: 4/6/2022	Cabinet type: EPACO MULTI STREAM - 4 STREAMS		Page: 323.a # Pages: 84

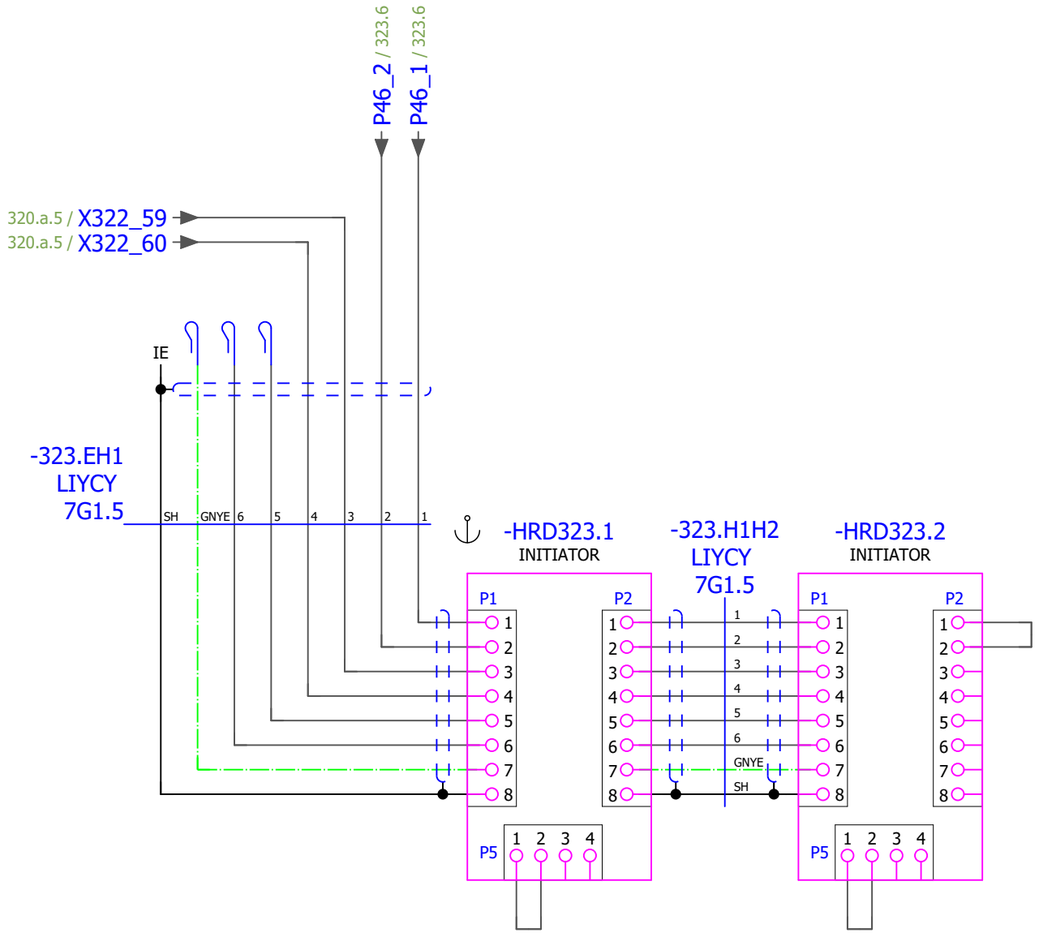

Fike
FIKE EUROPE
Fike Europe E.v.b.a. · Toekomstlaan 52 · B2200 Herentals · Belgium
Tel. +32 14 210031 · Fax +32 14 210743
Email: fike-europe@fike.com · website: www.fike .be

Don Valley Engineering
160737
160737-3-3

Explosion Protection Controller 3

File:	Drawingnr:	Revision:	Dwg. By:
160737-3-3	160737-3-3	-	Stefaan.Jo
Date: 4/6/2022	Cabinet type: EPACO MULTI STREAM - 4 STREAMS		Page: 323.b
			# Pages: 84

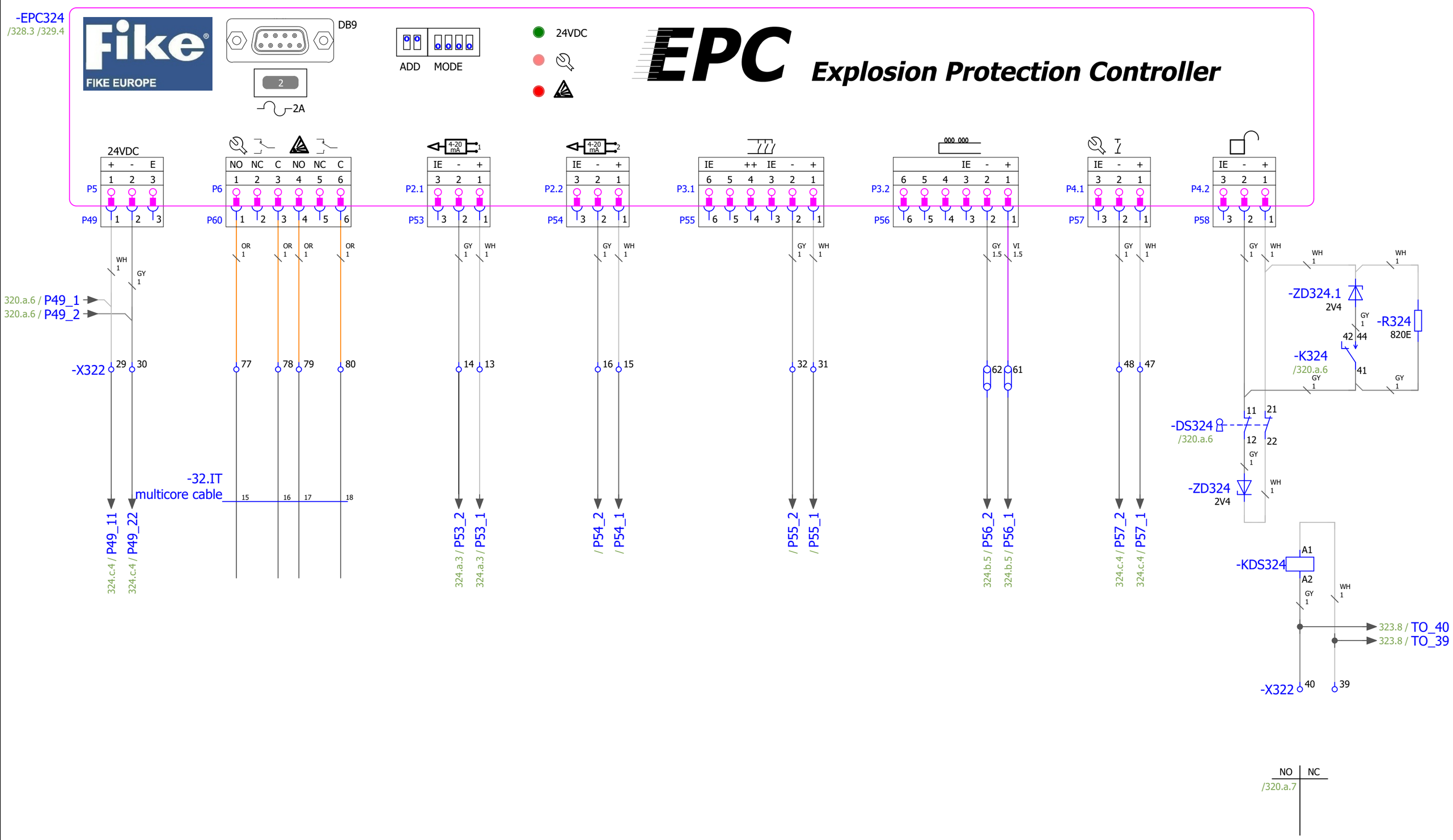

Previous:
323.b

Next:
324.a

Fike Europe E.v.b.a. · Toekomstlaan 52 · B2200 Herentals · Belgium
Tel. +32 14 210031 · Fax +32 14 210743
Email: fike-europe@fike.com · website: www.fike.be

Don Valley Engineering
160737
160737-3-3

Explosion Protection Controller 4

File:	Drawingnr:	Revision:	Dwg. By:
160737-3-3	160737-3-3	-	Stefaan.Jo
Date: 4/6/2022	Cabinet type: EPACO MULTI STREAM - 4 STREAMS		Page: 324 / # Pages: 84

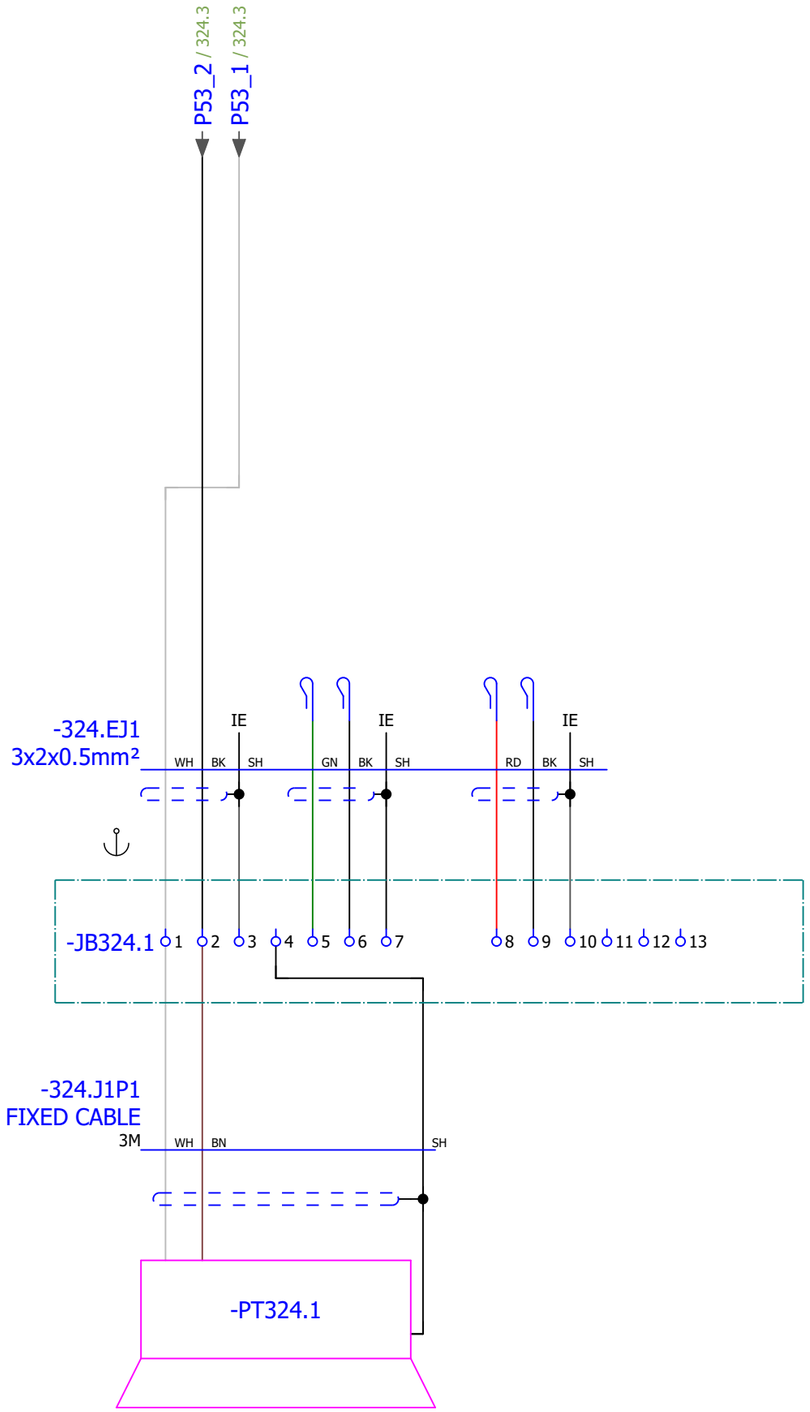

ATTENTION: Do not cut the breather tube from the detector(s) in the junction box

Previous:
324

Next:
324.b

Fike Europe E.v.b.a. · Toekomstlaan 52 · B2200 Herentals · Belgium
Tel. +32 14 210031 · Fax +32 14 210743
Email: fike-europe@fike.com · website: www.fike .be

Don Valley Engineering
160737
160737-3-3

Explosion Protection Controller 4

File:	Drawingnr:	Revision:	Dwg. By:
160737-3-3	160737-3-3	-	Stefaan.Jo
Date: 4/6/2022	Cabinet type: EPACO MULTI STREAM - 4 STREAMS		Page: 324.a
			# Pages: 84

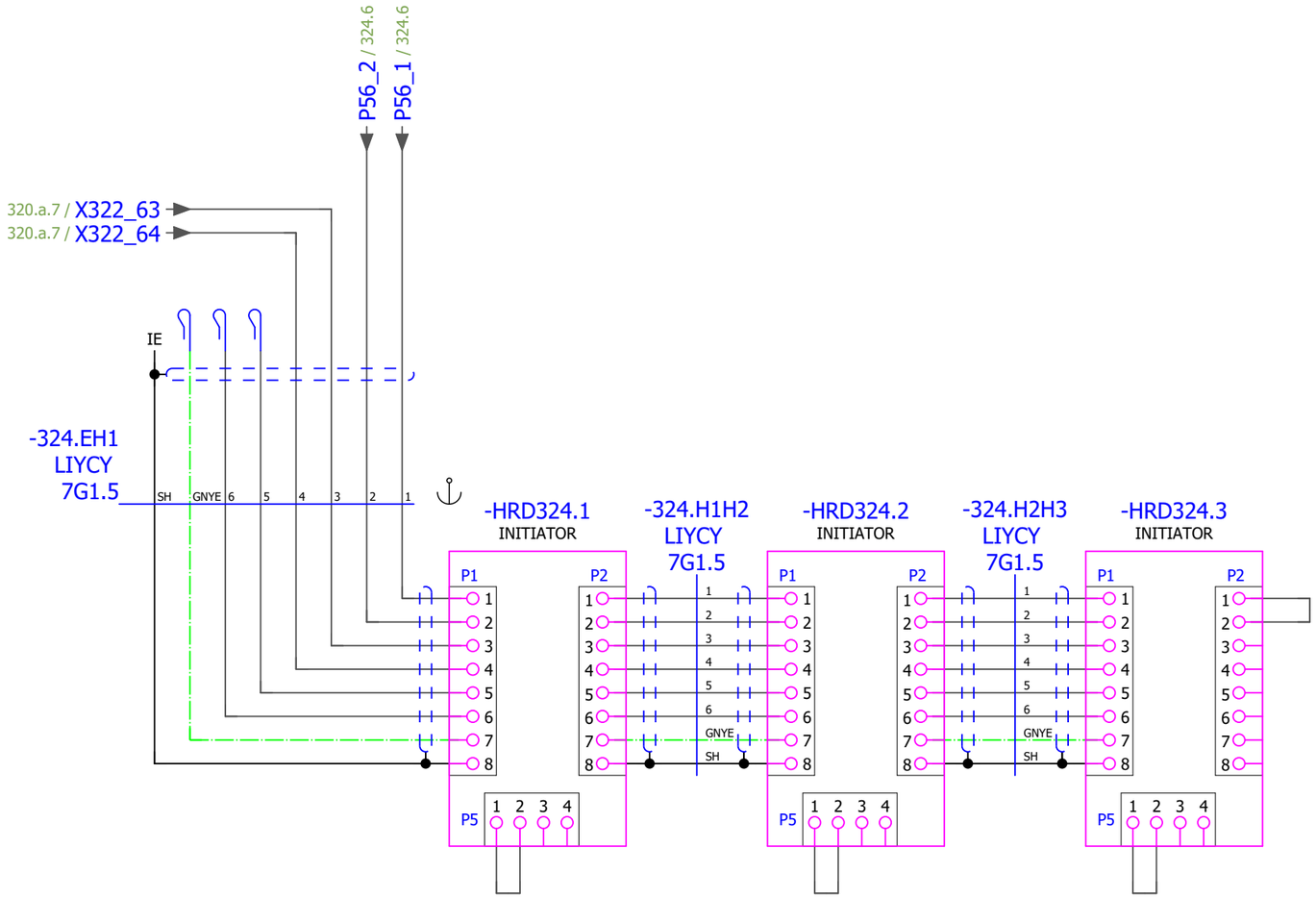

Previous:
324.a

Next:
324.c

Fike
FIKE EUROPE
Fike Europe E.v.b.a. · Toekomstlaan 52 · B2200 Herentals · Belgium
Tel. +32 14 210031 · Fax +32 14 210743
Email: fike-europe@fike.com · website: www.fike .be

Don Valley Engineering
160737
160737-3-3

Explosion Protection Controller 4

File:	Drawingnr:	Revision:	Dwg. By:
160737-3-3	160737-3-3	-	Stefaan.Jo
Date: 4/6/2022	Cabinet type: EPACO MULTI STREAM - 4 STREAMS		Page: 324.b
			# Pages: 84

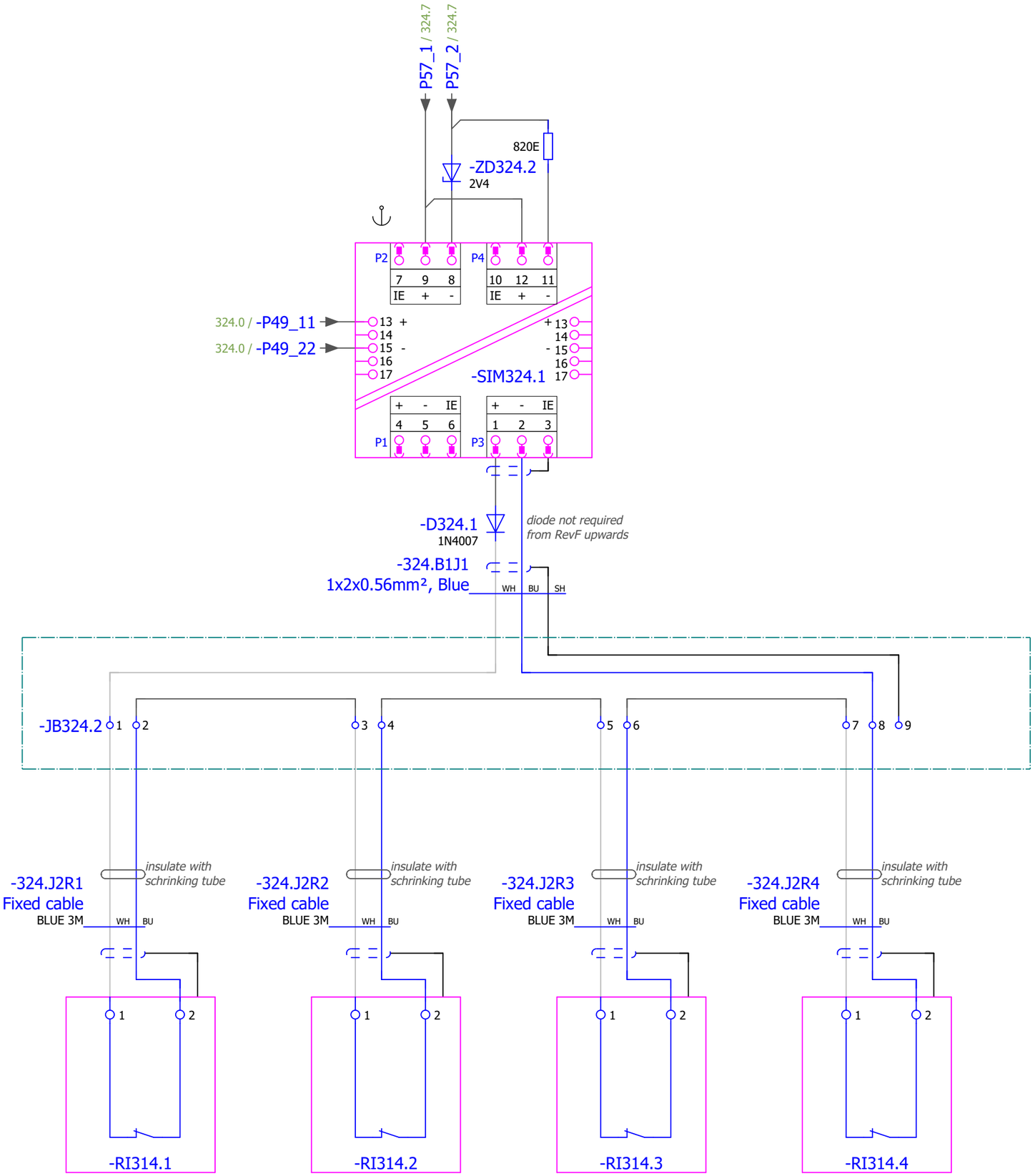

Previous:
324.b

Next:
325

Fike
FIKE EUROPE
Fike Europe E.v.b.a. · Toekomstlaan 52 · B2200 Herentals · Belgium
Tel. +32 14 210031 · Fax +32 14 210743
Email: fike-europe@fike.com · website: www.fike.be

Don Valley Engineering
160737
160737-3-3

Explosion Protection Controller 4

File:	Drawingnr:	Revision:	Dwg. By:
160737-3-3	160737-3-3	-	Stefaan.Jo
Date: 4/6/2022	Cabinet type: EPACO MULTI STREAM - 4 STREAMS		Page: 324.c
			# Pages: 84

-RC832
/328.8

RC8 Relay Contact module

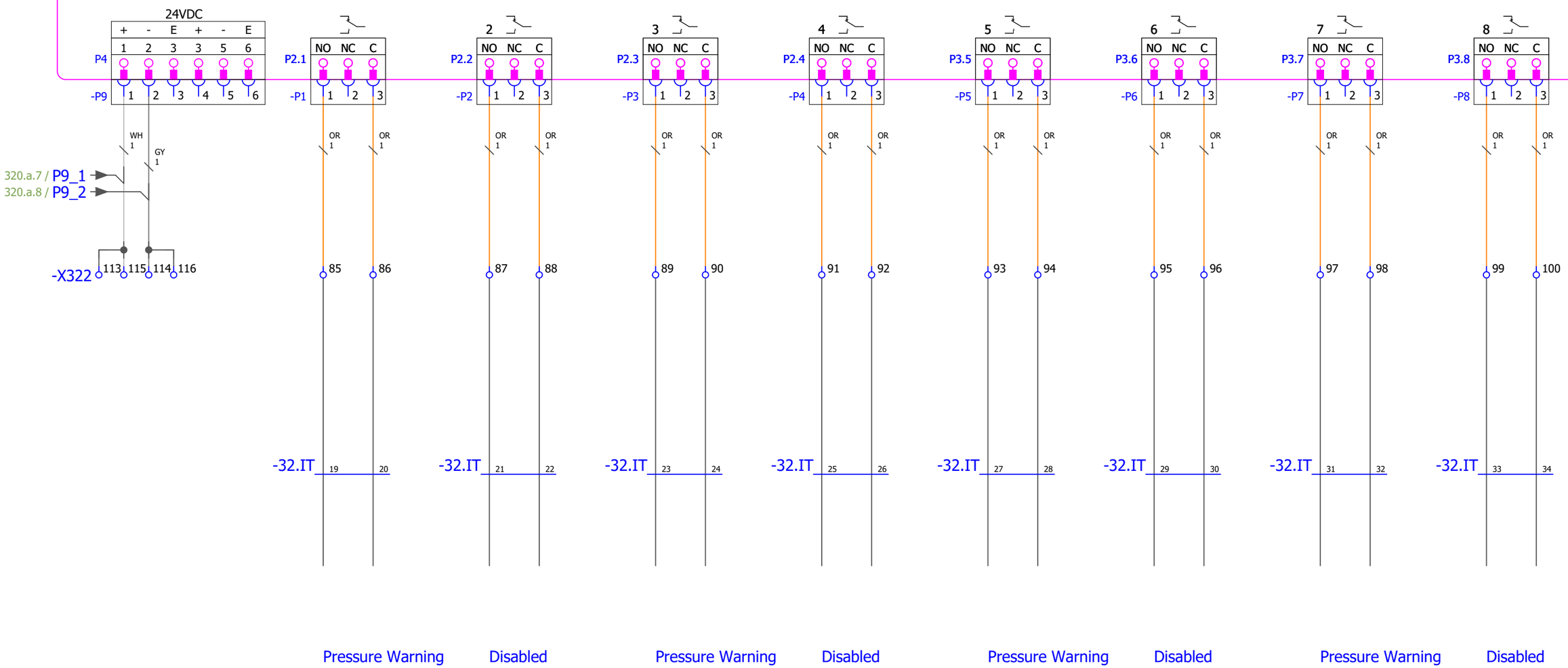

Previous:
324.c

Next:
327

Fike Europe E.v.b.a. · Toekomstlaan 52 · B2200 Herentals · Belgium
Tel. +32 14 210031 · Fax +32 14 210743
Email: fike-europe@fike.com · website: www.fike.be

Don Valley Engineering
160737
160737-3-3

RC8

File:	Drawingnr:	Revision:	Dwg. By:
160737-3-3	160737-3-3	-	Stefaan.Jo
Date: 4/6/2022	Cabinet type: EPACO MULTI STREAM - 4 STREAMS		Page: 325
			# Pages: 84

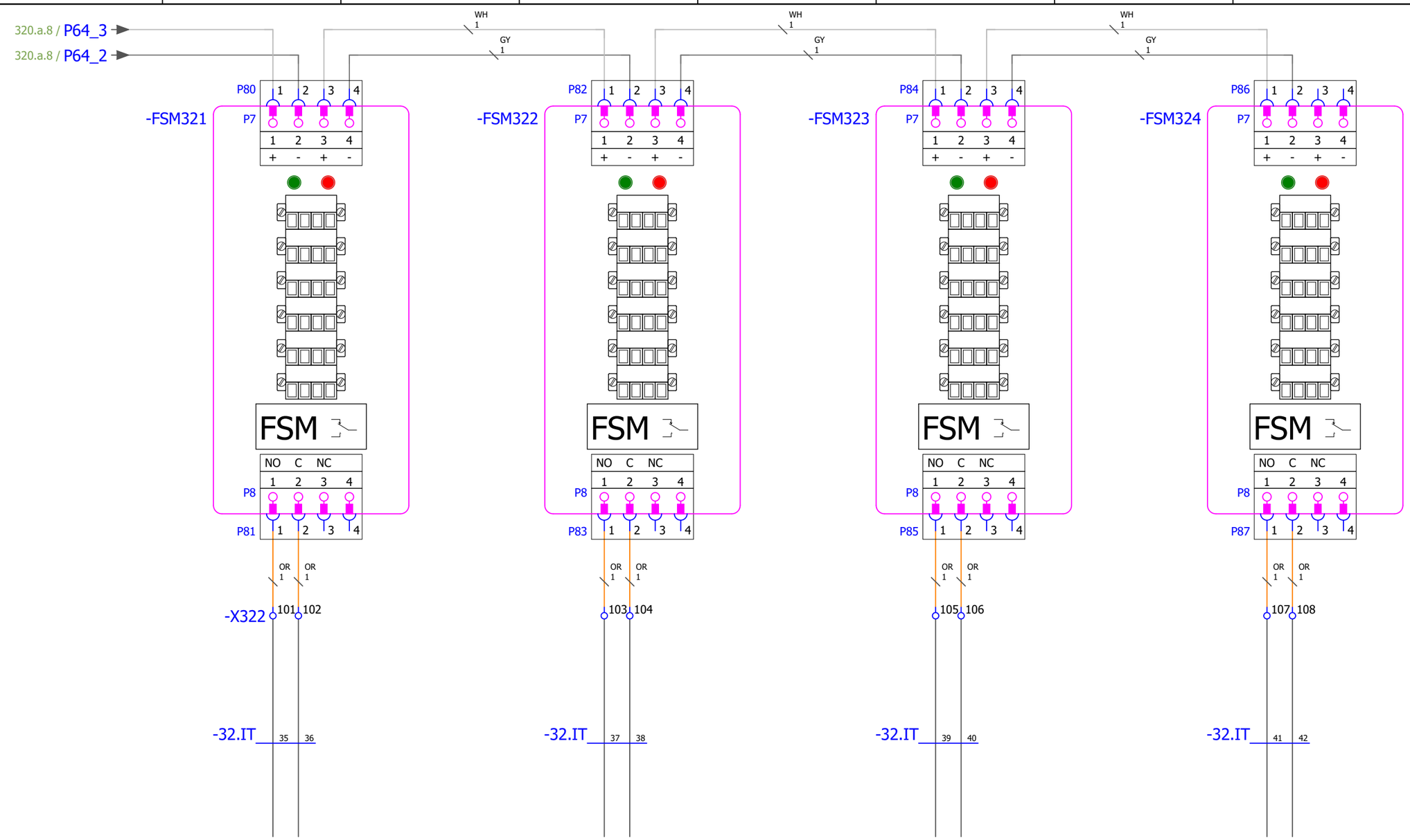

Fike Europe E.v.b.a. · Toekomstlaan 52 · B2200 Herentals · Belgium
Tel. +32 14 210031 · Fax +32 14 210743
Email: fike-europe@fike.com · website: www.fike.be

Don Valley Engineering
160737
160737-3-3

Fike Simulator Module

File:	Drawingnr:	Revision:	Dwg. By:
160737-3-3	160737-3-3	-	Stefaan.Jo
Date: 4/6/2022	Cabinet type: EPACO MULTI STREAM - 4 STREAMS		Page: 327 / # Pages: 84

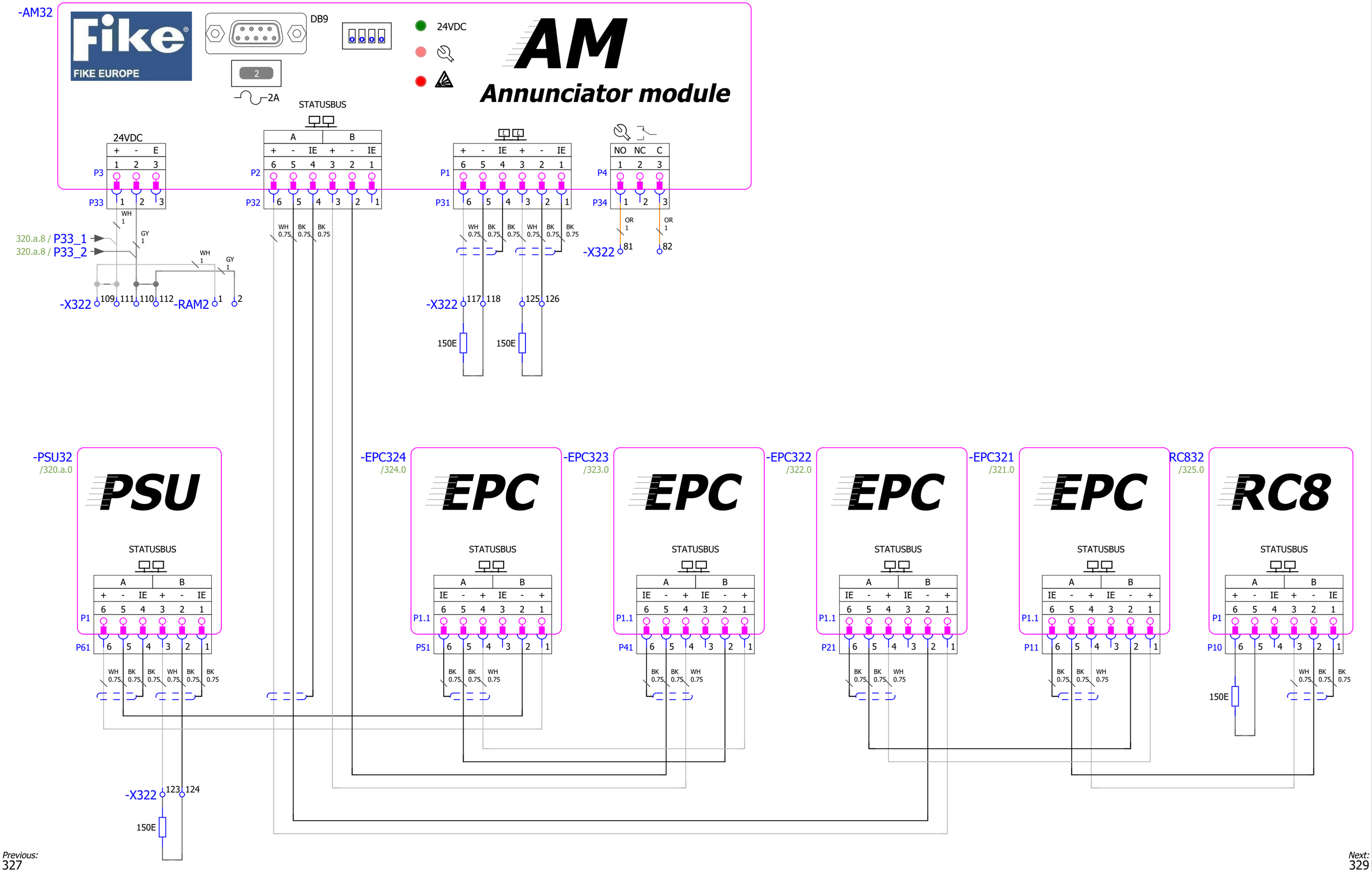

Previous:
327

Next:
329

Fike Europe E.v.b.a. · Toekomstlaan 52 · B2200 Herentals · Belgium
Tel. +32 14 210031 · Fax +32 14 210743
Email: fike-europe@fike.com · website: www.fike .be

Don Valley Engineering
160737
160737-3-3

Status Bus

File:	Drawingnr:	Revision:	Dwg. By:
160737-3-3	160737-3-3	-	Stefaan.Jo
Date: 4/6/2022	Cabinet type: EPACO MULTI STREAM - 4 STREAMS		Page: 328
			# Pages: 84

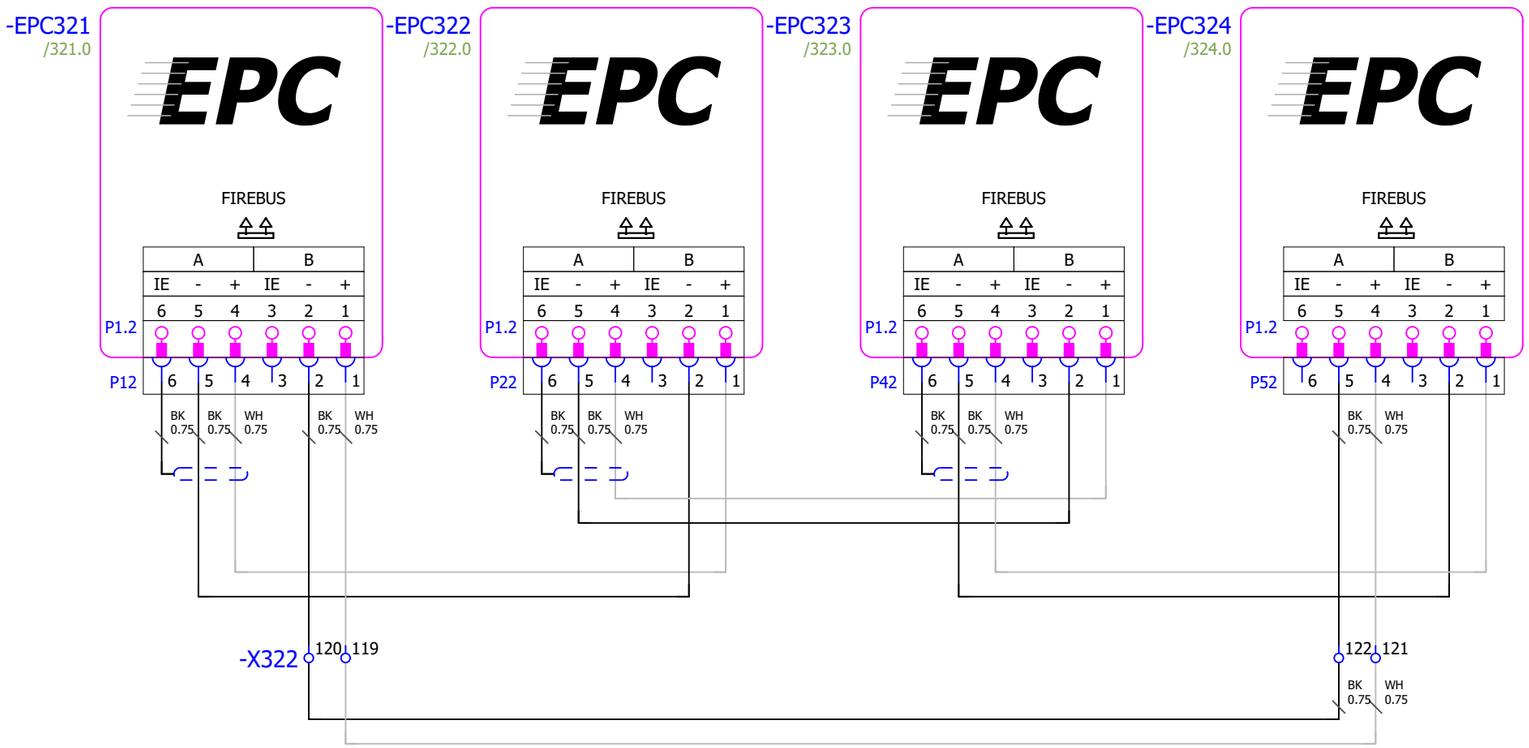

Previous:
328

Next:
+STREAM3/330.a

Fike
FIKE EUROPE
Fike Europe E.v.b.a. · Toekomstlaan 52 · B2200 Herentals · Belgium
Tel. +32 14 210031 · Fax +32 14 210743
Email: fike-europe@fike.com · website: www.fike.be

Don Valley Engineering
160737
160737-3-3

Fire Bus

File:	Drawingnr:	Revision:	Dwg. By:
160737-3-3	160737-3-3	-	Stefaan.Jo
Date: 4/6/2022	Cabinet type: EPACO MULTI STREAM - 4 STREAMS		Page: 329
			# Pages: 84

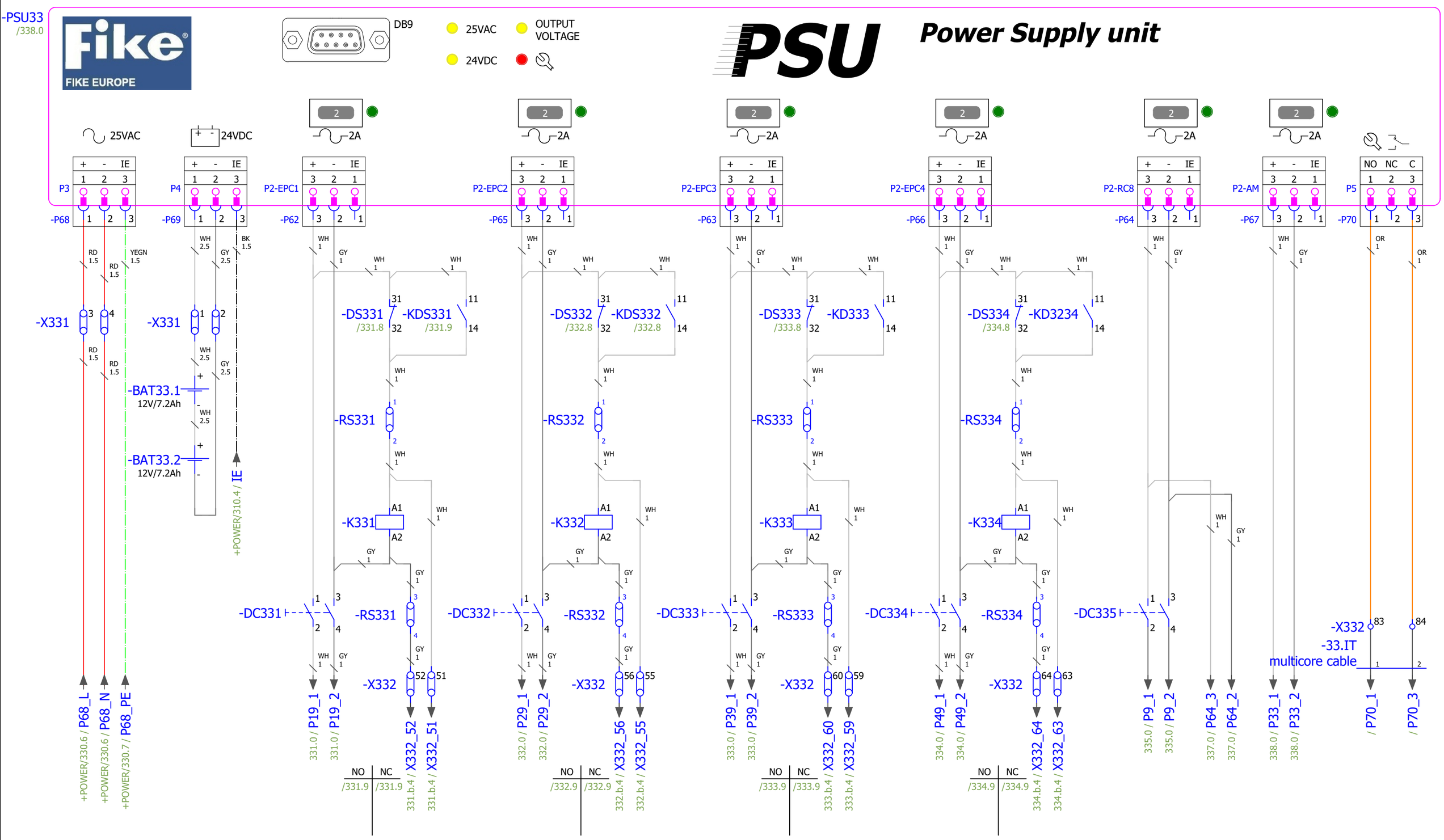

Previous:
+STREAM2/329

Next:
331

Fike Europe E.v.b.a. · Toekomstlaan 52 · B2200 Herentals · Belgium
Tel. +32 14 210031 · Fax +32 14 210743
Email: fike-europe@fike.com · website: www.fike.be

Don Valley Engineering
160737
160737-3-3

Power Supply Unit 1

File:	Drawingnr:	Revision:	Dwg. By:
160737-3-3	160737-3-3	-	Stefaan.Jo
Date: 4/6/2022	Cabinet type: EPACO MULTI STREAM - 4 STREAMS		Page: 330.a
			# Pages: 84

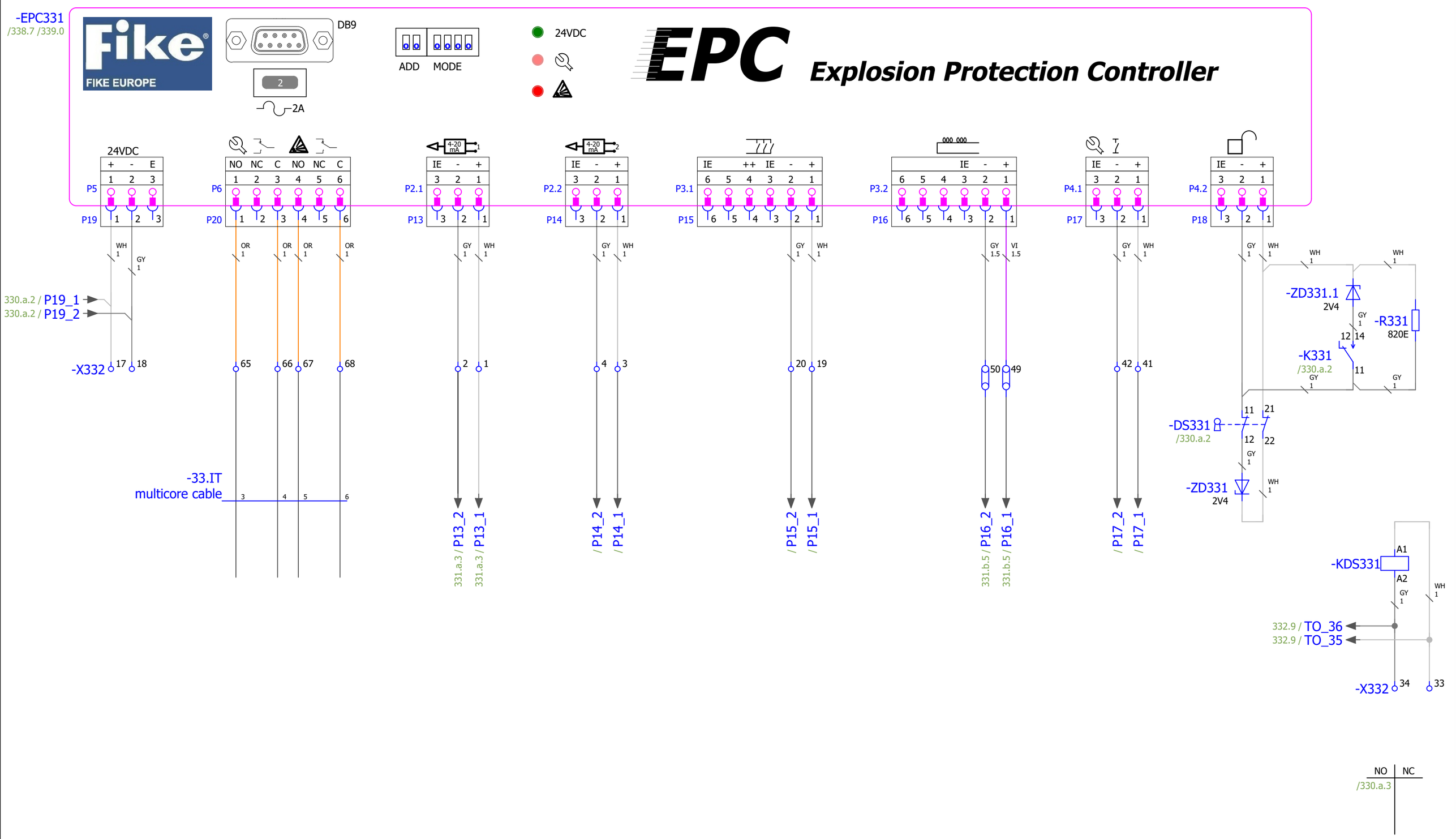

Fike Europe E.v.b.a. · Toekomstlaan 52 · B2200 Herentals · Belgium
Tel. +32 14 210031 · Fax +32 14 210743
Email: fike-europe@fike.com · website: www.fike.be

Don Valley Engineering
160737
160737-3-3

Explosion Protection Controller 1

File:	Drawingnr:	Revision:	Dwg. By:
160737-3-3	160737-3-3	-	Stefaan.Jo
Date: 4/6/2022	Cabinet type: EPACO MULTI STREAM - 4 STREAMS		Page: 331 / # Pages: 84

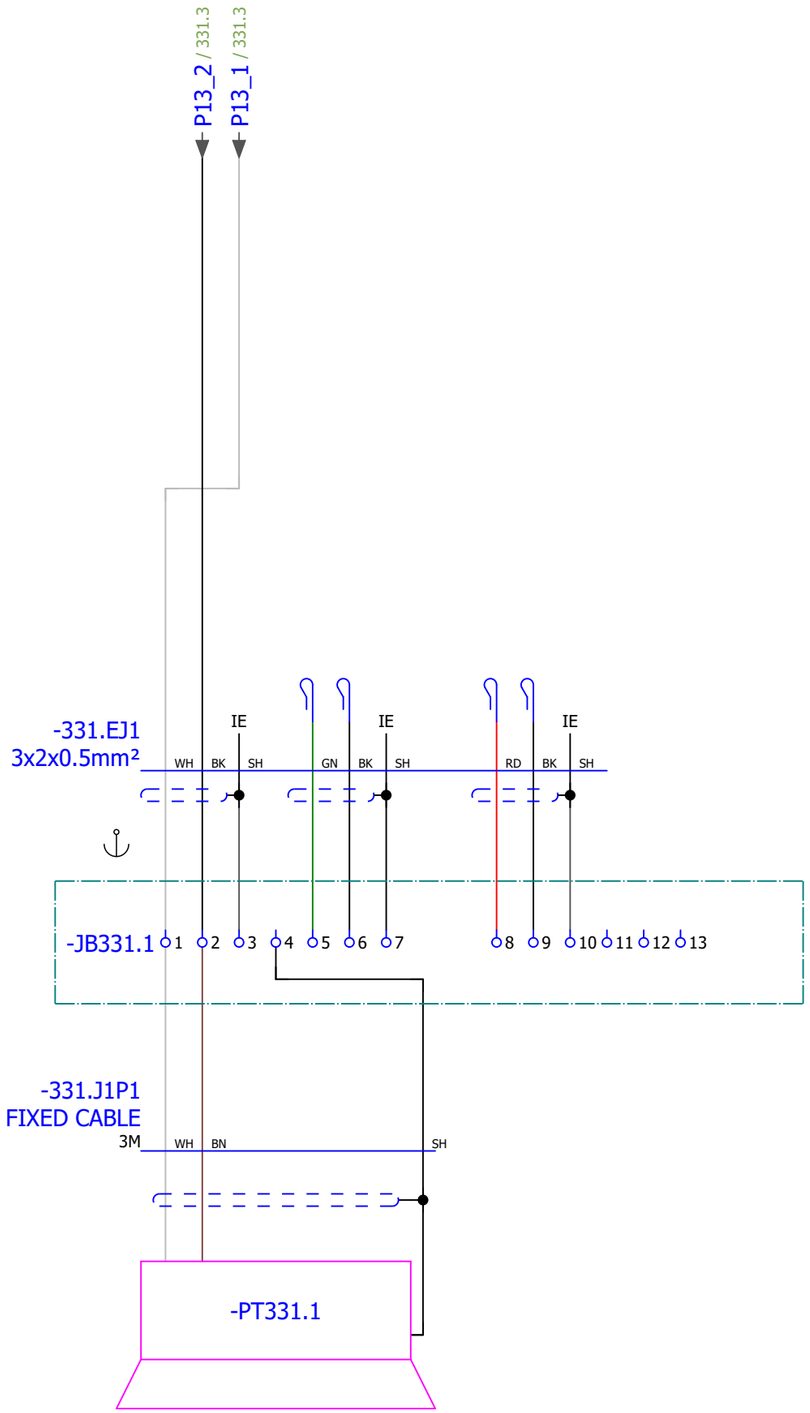

ATTENTION: Do not cut the breather tube from the detector(s) in the junction box

Previous:
331

Next:
331.b

Fike Europe E.v.b.a. · Toekomstlaan 52 · B2200 Herentals · Belgium
Tel. +32 14 210031 · Fax +32 14 210743
Email: fike-europe@fike.com · website: www.fike .be

Don Valley Engineering 160737 160737-3-3	Explosion Protection Controller 1	File: 160737-3-3	Drawingnr: 160737-3-3	Revision: -	Dwg. By: Stefaan.Jo
		Date: 4/6/2022	Cabinet type: EPACO MULTI STREAM - 4 STREAMS		Page: 331.a # Pages: 84

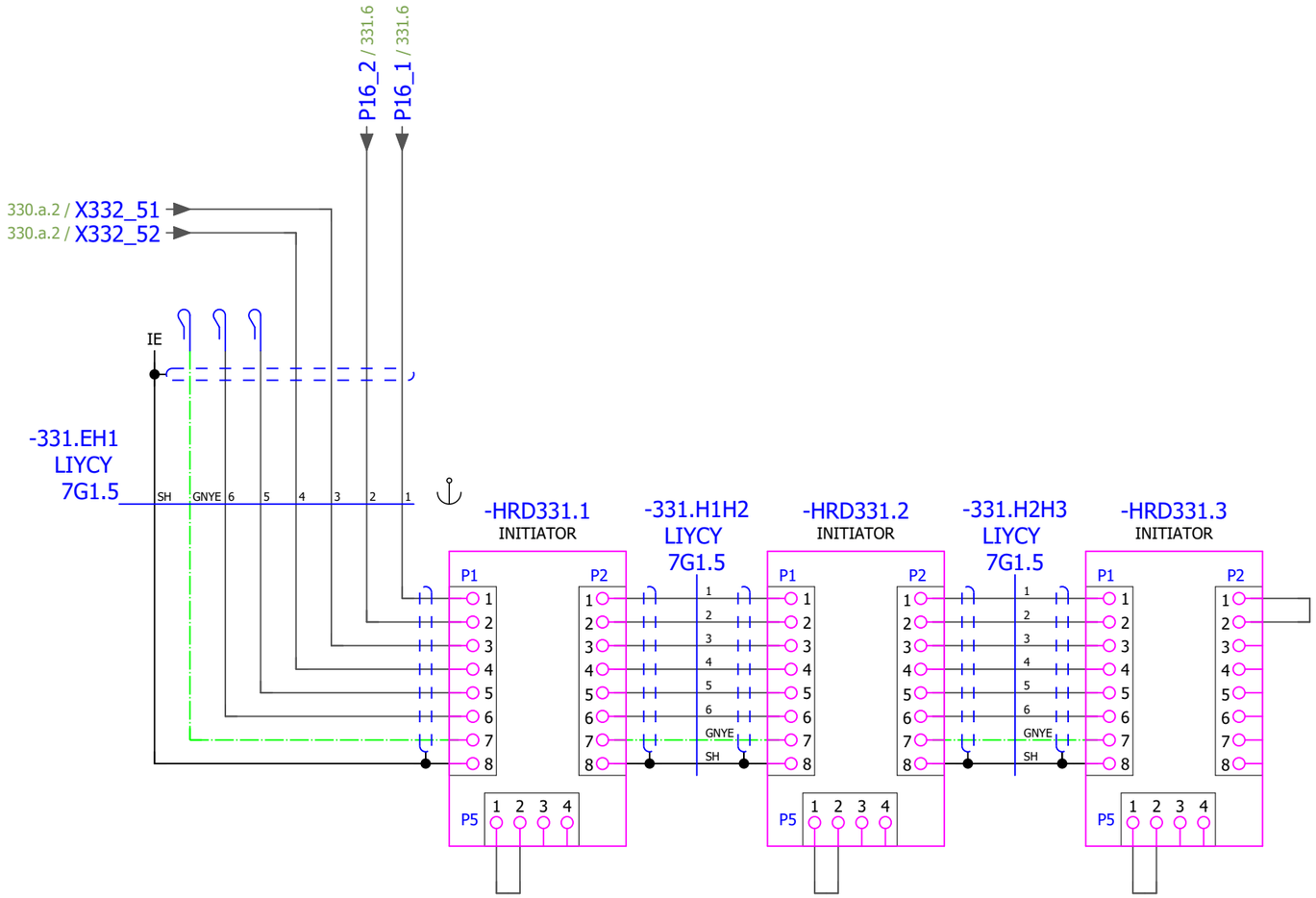

Previous:
331.a

Next:
332

Fike
FIKE EUROPE
Fike Europe E.v.b.a. · Toekomstlaan 52 · B2200 Herentals · Belgium
Tel. +32 14 210031 · Fax +32 14 210743
Email: fike-europe@fike.com · website: www.fike .be

Don Valley Engineering
160737
160737-3-3

Explosion Protection Controller 1

File:	Drawingnr:	Revision:	Dwg. By:
160737-3-3	160737-3-3	-	Stefaan.Jo
Date: 4/6/2022	Cabinet type: EPACO MULTI STREAM - 4 STREAMS		Page: 331.b
			# Pages: 84

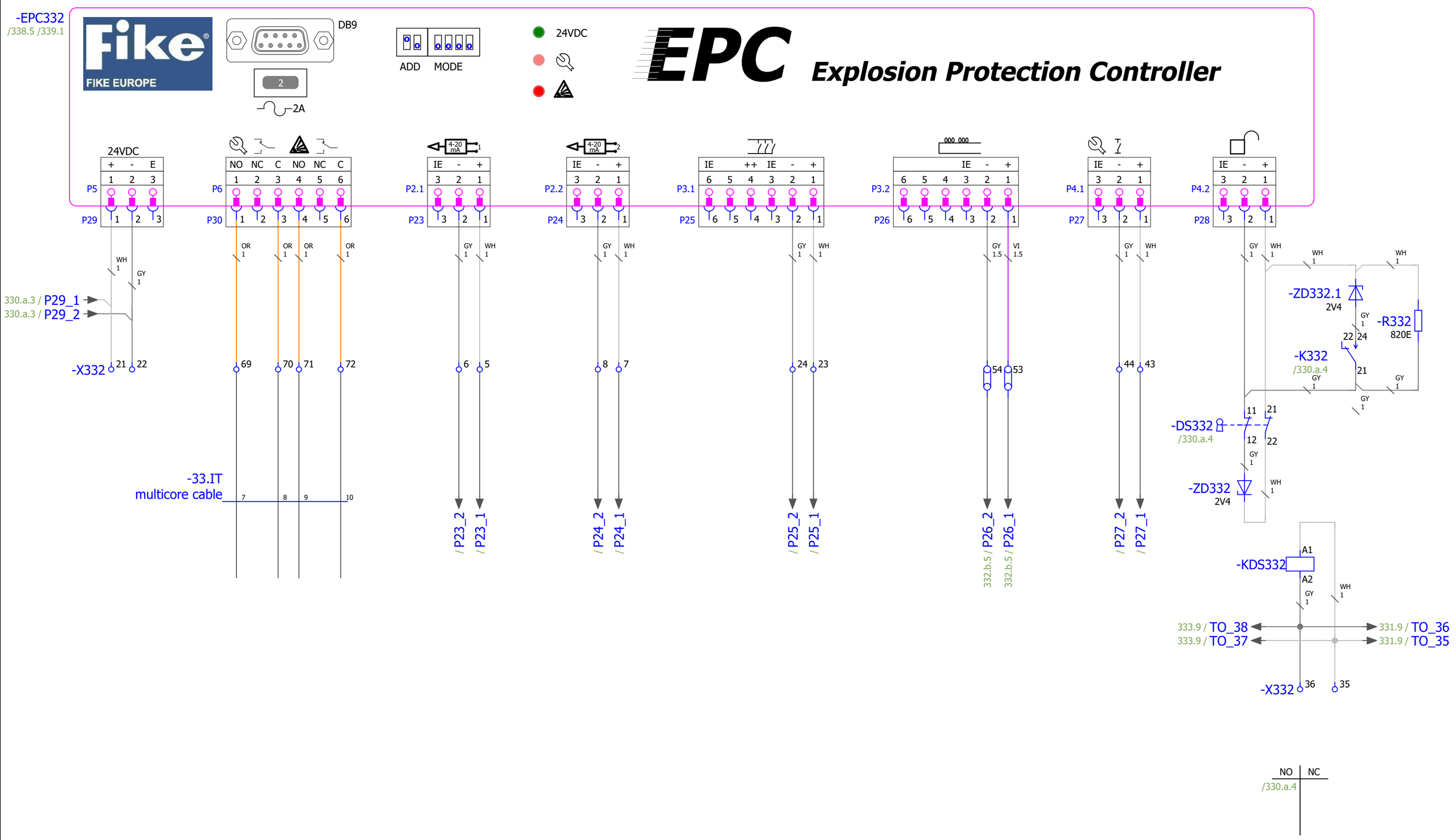

Previous:
331.b

Next:
332.b

Fike Europe E.v.b.a. · Toekomstlaan 52 · B2200 Herentals · Belgium
Tel. +32 14 210031 · Fax +32 14 210743
Email: fike-europe@fike.com · website: www.fike.be

Don Valley Engineering
160737
160737-3-3

Explosion Protection Controller 2

File:	Drawingnr:	Revision:	Dwg. By:
160737-3-3	160737-3-3	-	Stefaan.Jo
Date: 4/6/2022	Cabinet type: EPACO MULTI STREAM - 4 STREAMS		Page: 332 / # Pages: 84

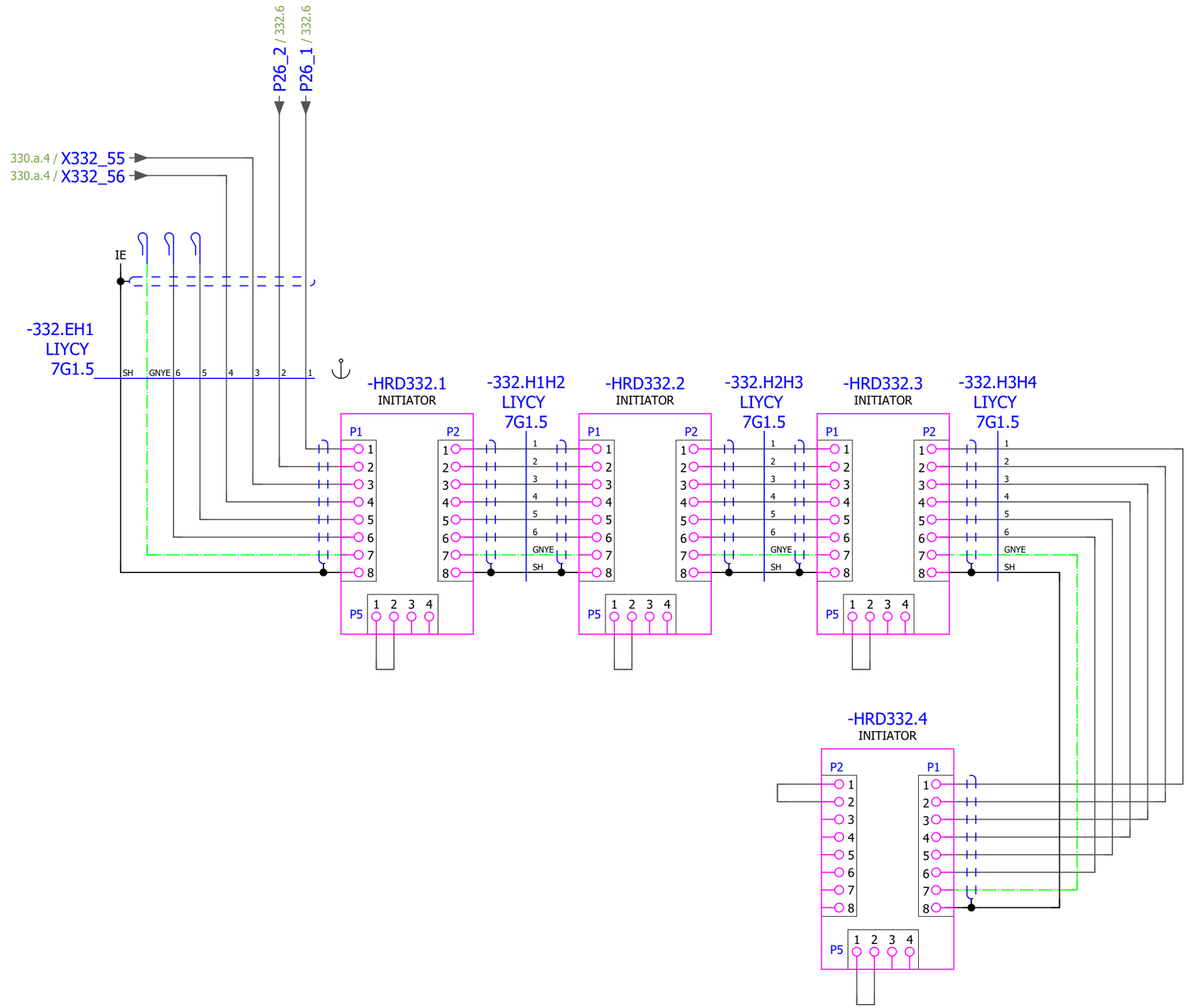

Previous:
332

Next:
333

Fike
FIKE EUROPE
Fike Europe E.v.b.a. · Toekomstlaan 52 · B2200 Herentals · Belgium
Tel.: +32 14 210031 · Fax +32 14 210743
Email: fike-europe@fike.com · website: www.fike.be

Don Valley Engineering
160737
160737-3-3

Explosion Protection Controller 2

File:	Drawingnr:	Revision:	Dwg. By:
160737-3-3	160737-3-3	-	Stefaan.Jo
Date: 4/6/2022	Cabinet type: EPACO MULTI STREAM - 4 STREAMS		Page: 332.b
			# Pages: 84

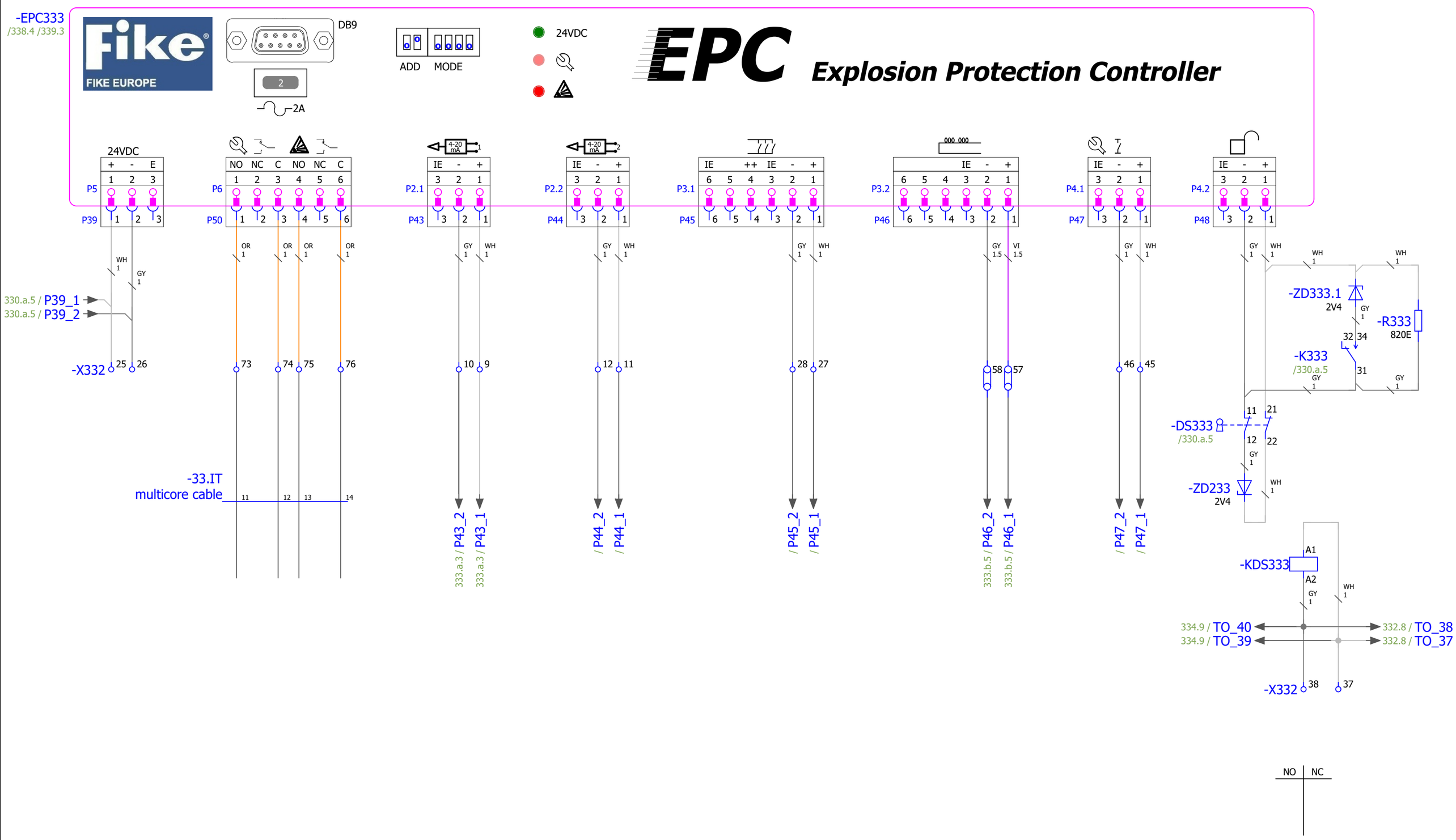

Fike Europe E.v.b.a. · Toekomstlaan 52 · B2200 Herentals · Belgium
Tel. +32 14 210031 · Fax +32 14 210743
Email: fike-europe@fike.com · website: www.fike.be

Don Valley Engineering 160737 160737-3-3	Explosion Protection Controller 3	File: 160737-3-3	Drawingnr: 160737-3-3	Revision: -	Dwg. By: Stefaan.Jo
		Date: 4/6/2022	Cabinet type: EPACO MULTI STREAM - 4 STREAMS		Page: 333 # Pages: 84

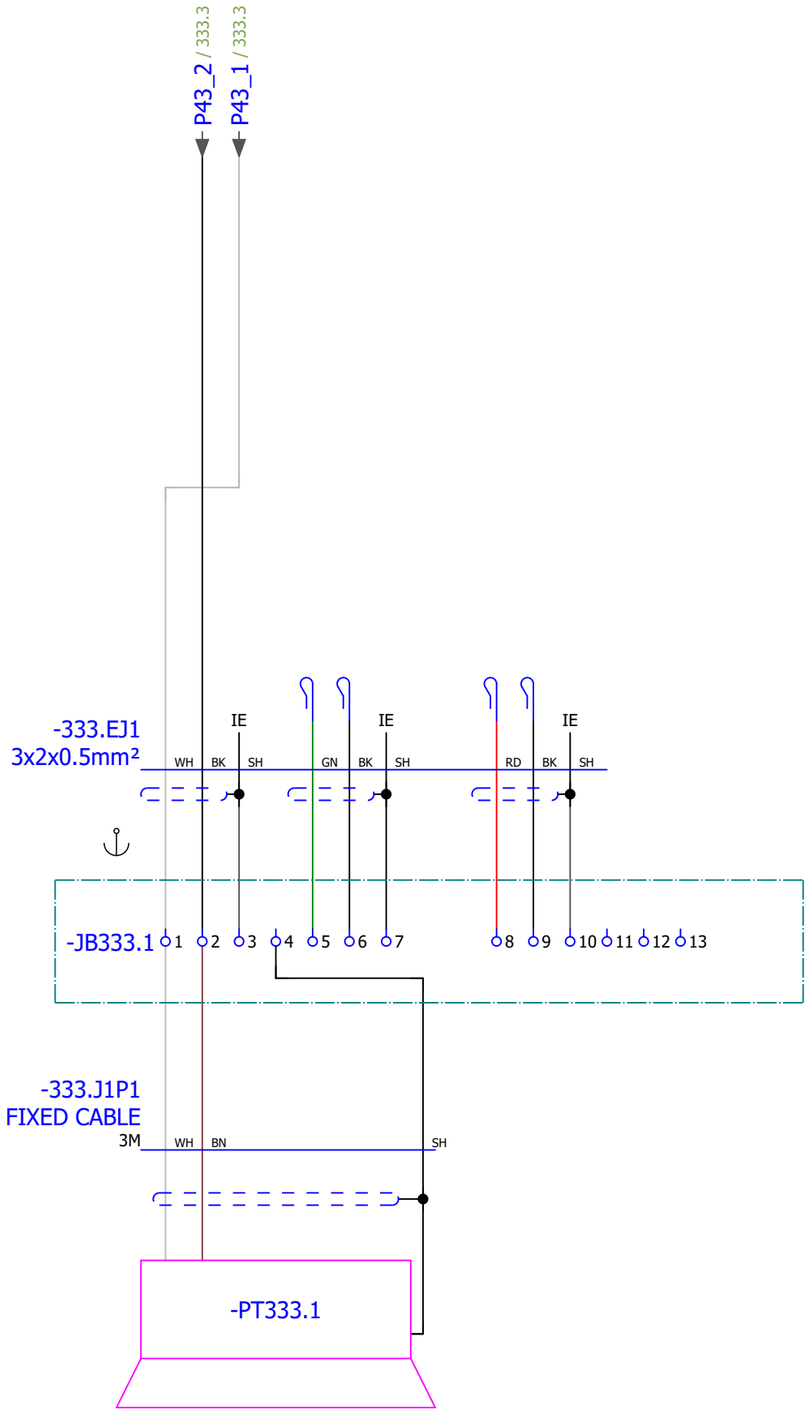

ATTENTION: Do not cut the breather tube from the detector(s) in the junction box

Previous:
333

Next:
333.b

Fike Europe E.v.b.a. · Toekomstlaan 52 · B2200 Herentals · Belgium
Tel. +32 14 210031 · Fax +32 14 210743
Email: fike-europe@fike.com · website: www.fike .be

Don Valley Engineering
160737
160737-3-3

Explosion Protection Controller 3

File:	Drawingnr:	Revision:	Dwg. By:
160737-3-3	160737-3-3	-	Stefaan.Jo
Date: 4/6/2022	Cabinet type: EPACO MULTI STREAM - 4 STREAMS		Page: 333.a
			# Pages: 84

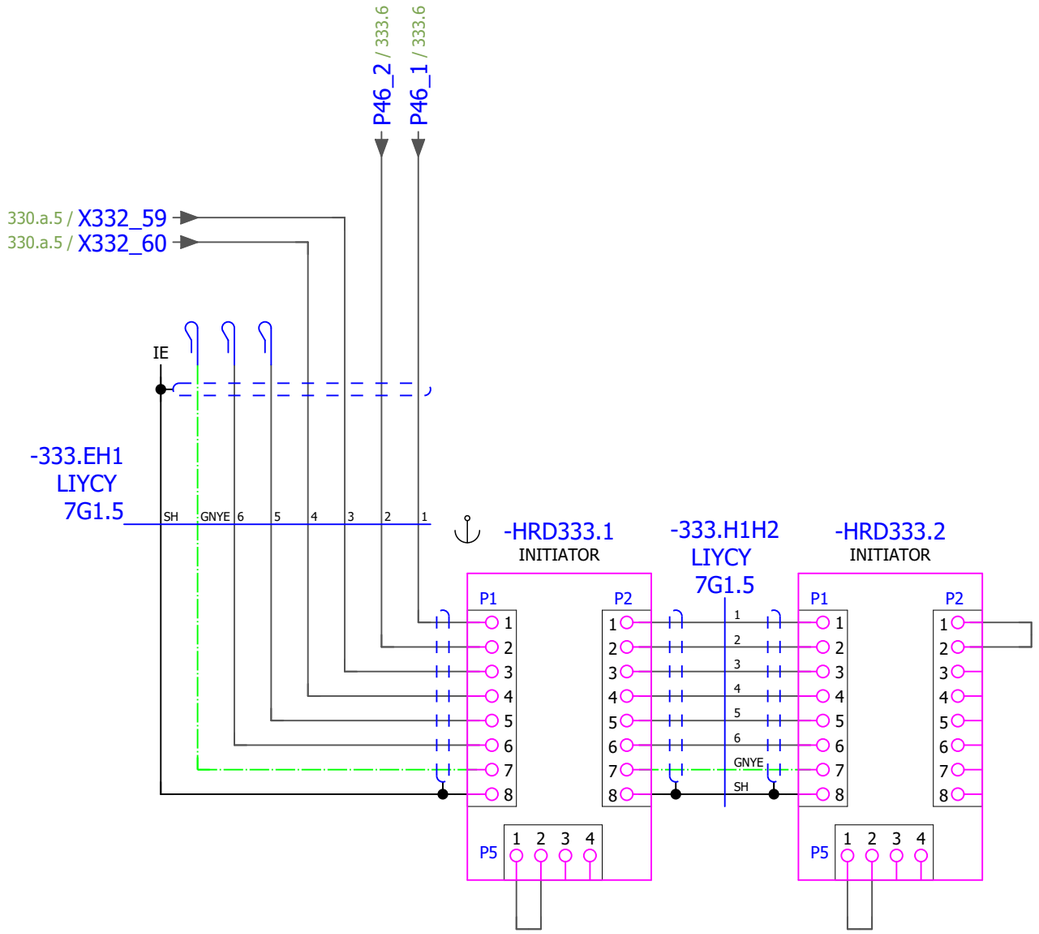

Previous:
333.a

Next:
334

Fike
FIKE EUROPE
Fike Europe E.v.b.a. · Toekomstlaan 52 · B2200 Herentals · Belgium
Tel. +32 14 210031 · Fax +32 14 210743
Email: fike-europe@fike.com · website: www.fike .be

Don Valley Engineering
160737
160737-3-3

Explosion Protection Controller 3

File:	Drawingnr:	Revision:	Dwg. By:
160737-3-3	160737-3-3	-	Stefaan.Jo
Date: 4/6/2022	Cabinet type: EPACO MULTI STREAM - 4 STREAMS		Page: 333.b
			# Pages: 84

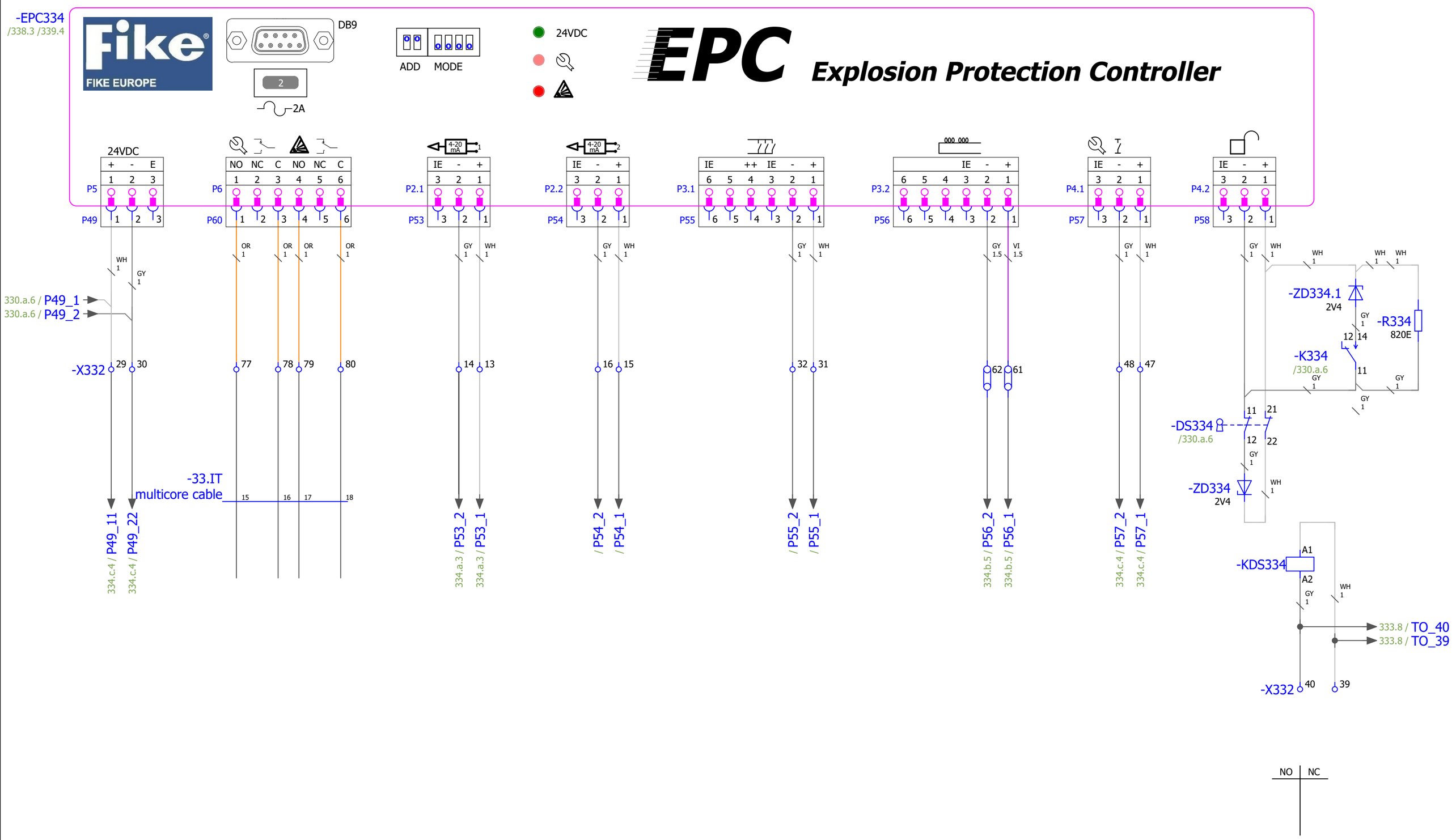

Previous:
333.b

Next:
334.a

Fike Europe E.v.b.a. · Toekomstlaan 52 · B2200 Herentals · Belgium
Tel. +32 14 210031 · Fax +32 14 210743
Email: fike-europe@fike.com · website: www.fike.be

Don Valley Engineering
160737
160737-3-3

Explosion Protection Controller 4

File:	Drawingnr:	Revision:	Dwg. By:
160737-3-3	160737-3-3	-	Stefaan.Jo
Date: 4/6/2022	Cabinet type: EPACO MULTI STREAM - 4 STREAMS		Page: 334 / # Pages: 84

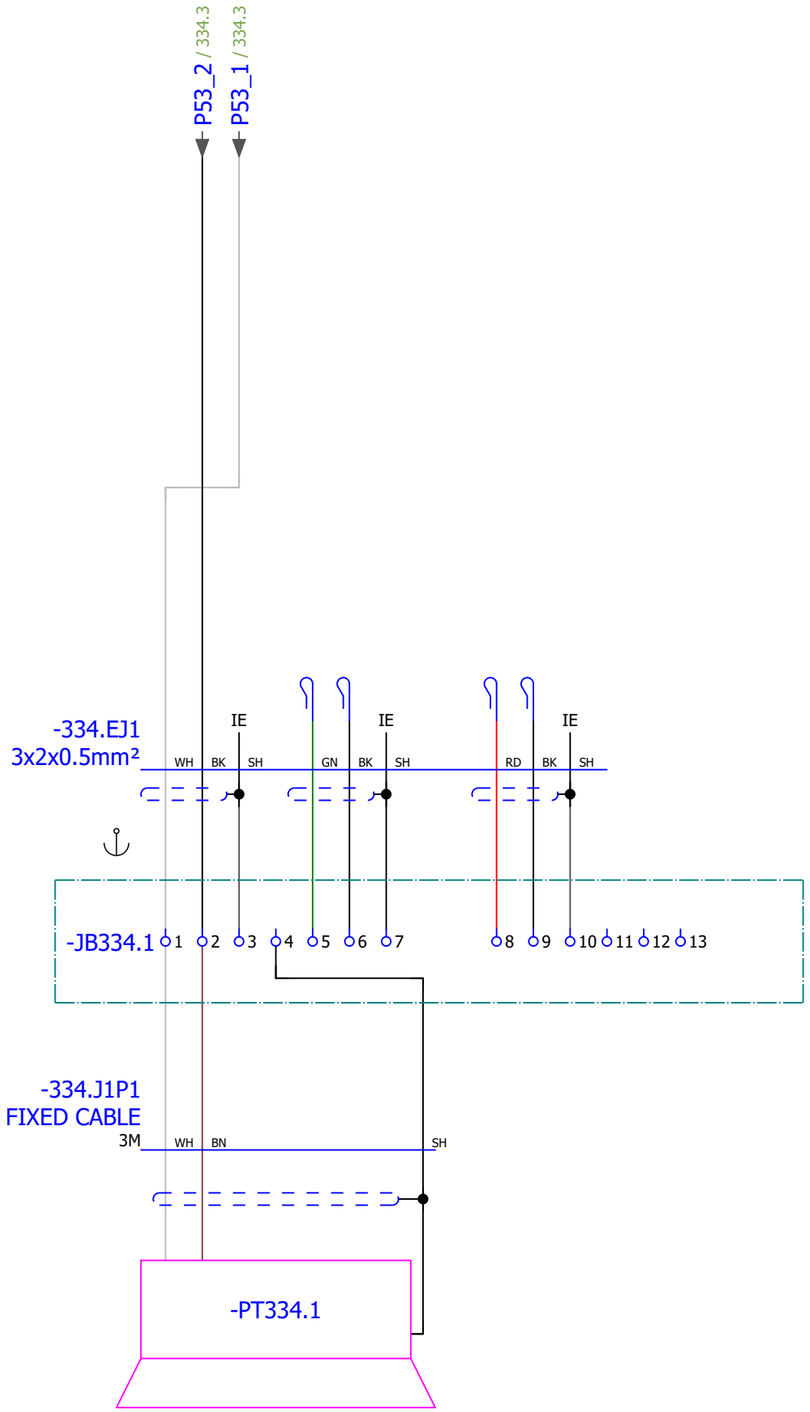

ATTENTION: Do not cut the breather tube from the detector(s) in the junction box

Fike Europe E.v.b.a. · Toekomstlaan 52 · B2200 Herentals · Belgium
Tel. +32 14 210031 · Fax +32 14 210743
Email: fike-europe@fike.com · website: www.fike .be

Don Valley Engineering
160737
160737-3-3

Explosion Protection Controller 4

File: 160737-3-3	*Drawingnr:* 160737-3-3	*Revision:* -	*Dwg. By:* Stefaan.Jo
Date: 4/6/2022	*Cabinet type:* EPACO MULTI STREAM - 4 STREAMS		Page: 334.a
			# Pages: 84

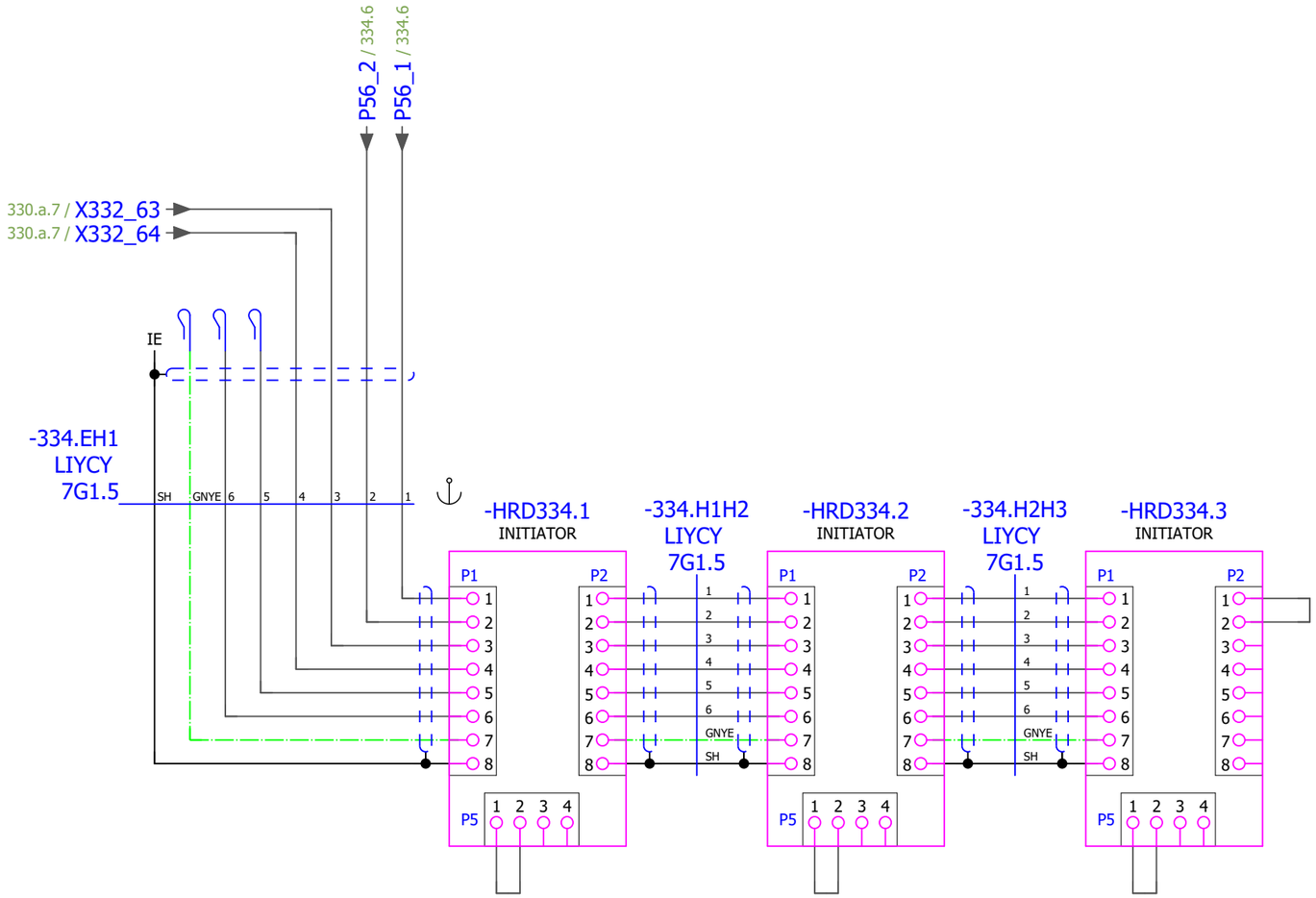

Previous:
334.a

Next:
334.c

Fike
FIKE EUROPE
Fike Europe E.v.b.a. · Toekomstlaan 52 · B2200 Herentals · Belgium
Tel. +32 14 210031 · Fax +32 14 210743
Email: fike-europe@fike.com · website: www.fike .be

Don Valley Engineering
160737
160737-3-3

Explosion Protection Controller 4

File:	Drawingnr:	Revision:	Dwg. By:
160737-3-3	160737-3-3	-	Stefaan.Jo
Date: 4/6/2022	Cabinet type: EPACO MULTI STREAM - 4 STREAMS		Page: 334.b
			# Pages: 84

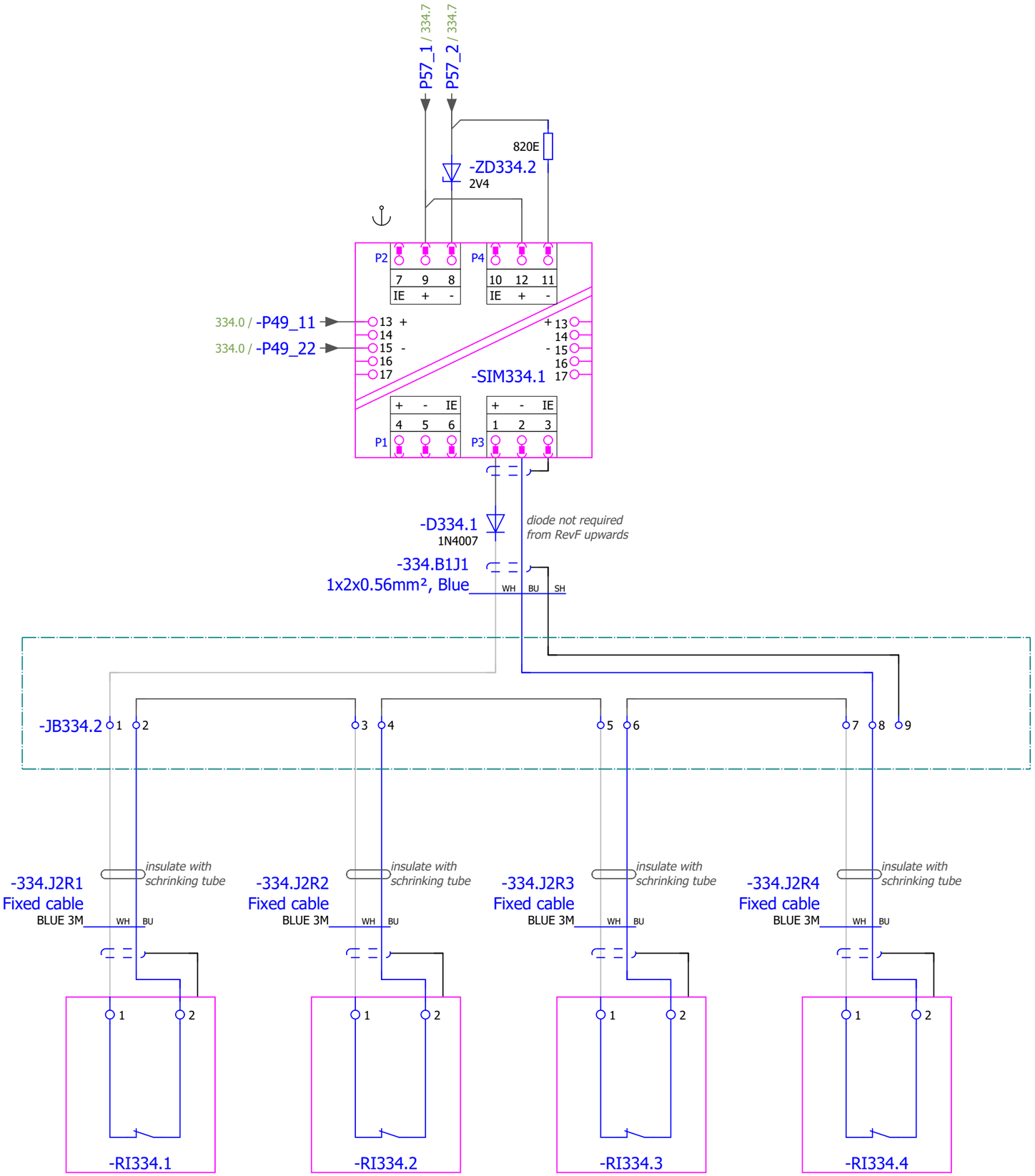

Previous:
334.b

Next:
335

Fike
FIKE EUROPE
Fike Europe E.v.b.a. · Toekomstlaan 52 · B2200 Herentals · Belgium
Tel. +32 14 210031 · Fax +32 14 210743
Email: fike-europe@fike.com · website: www.fike.be

Don Valley Engineering
160737
160737-3-3

Explosion Protection Controller 4

File:	Drawingnr:	Revision:	Dwg. By:
160737-3-3	160737-3-3	-	Stefaan.Jo
Date: 4/6/2022	Cabinet type: EPACO MULTI STREAM - 4 STREAMS		Page: 334.c
			# Pages: 84

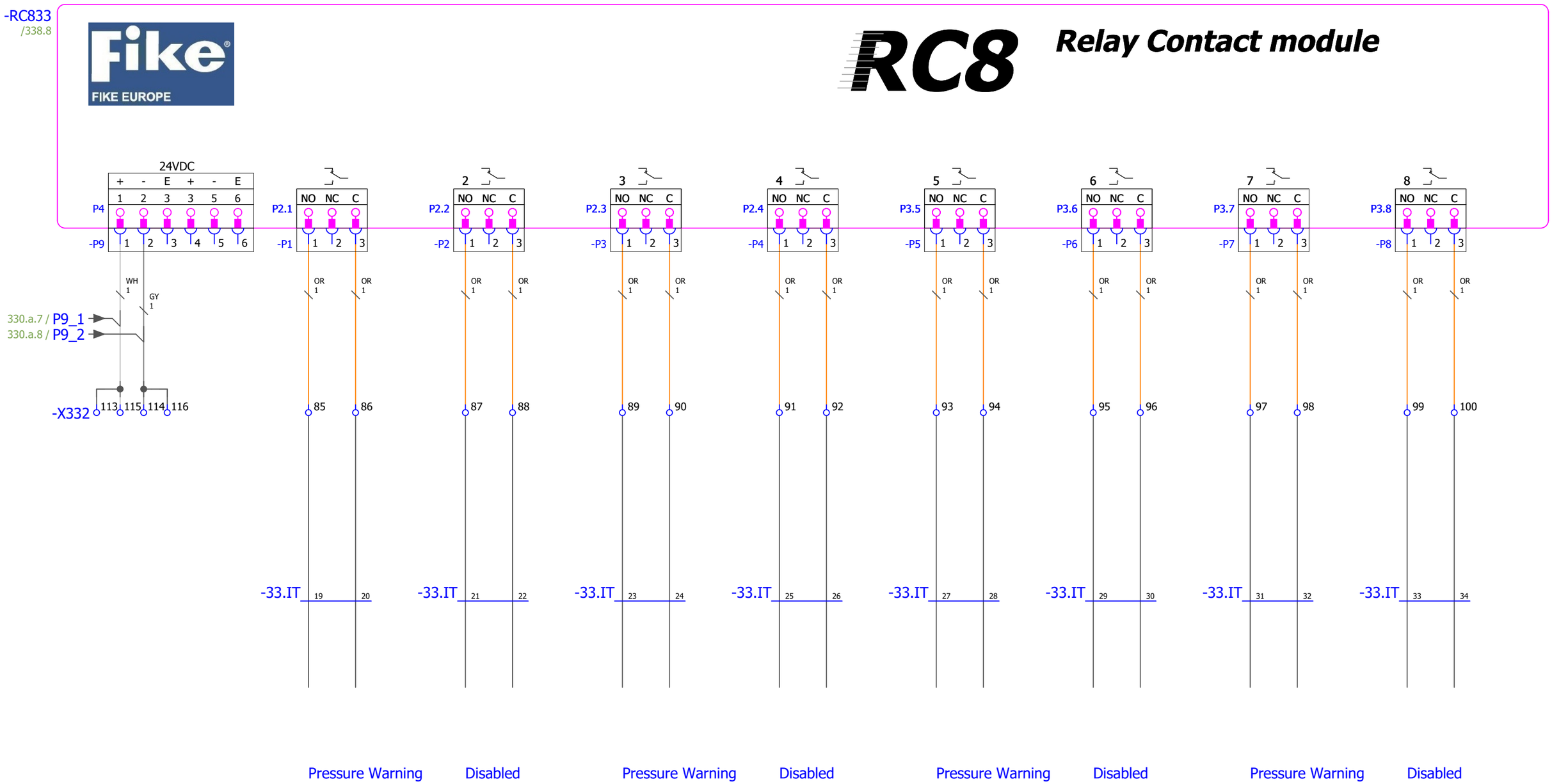

Previous:
334.c

Next:
337

Fike Europe E.v.b.a. · Toekomstlaan 52 · B2200 Herentals · Belgium
Tel. +32 14 210031 · Fax +32 14 210743
Email: fike-europe@fike.com · website: www.fike.be

Don Valley Engineering 160737 160737-3-3	RC8	File: 160737-3-3	Drawingnr: 160737-3-3	Revision: -	Dwg. By: Stefaan.Jo
		Date: 4/6/2022	Cabinet type: EPACO MULTI STREAM - 4 STREAMS		Page: 335 # Pages: 84

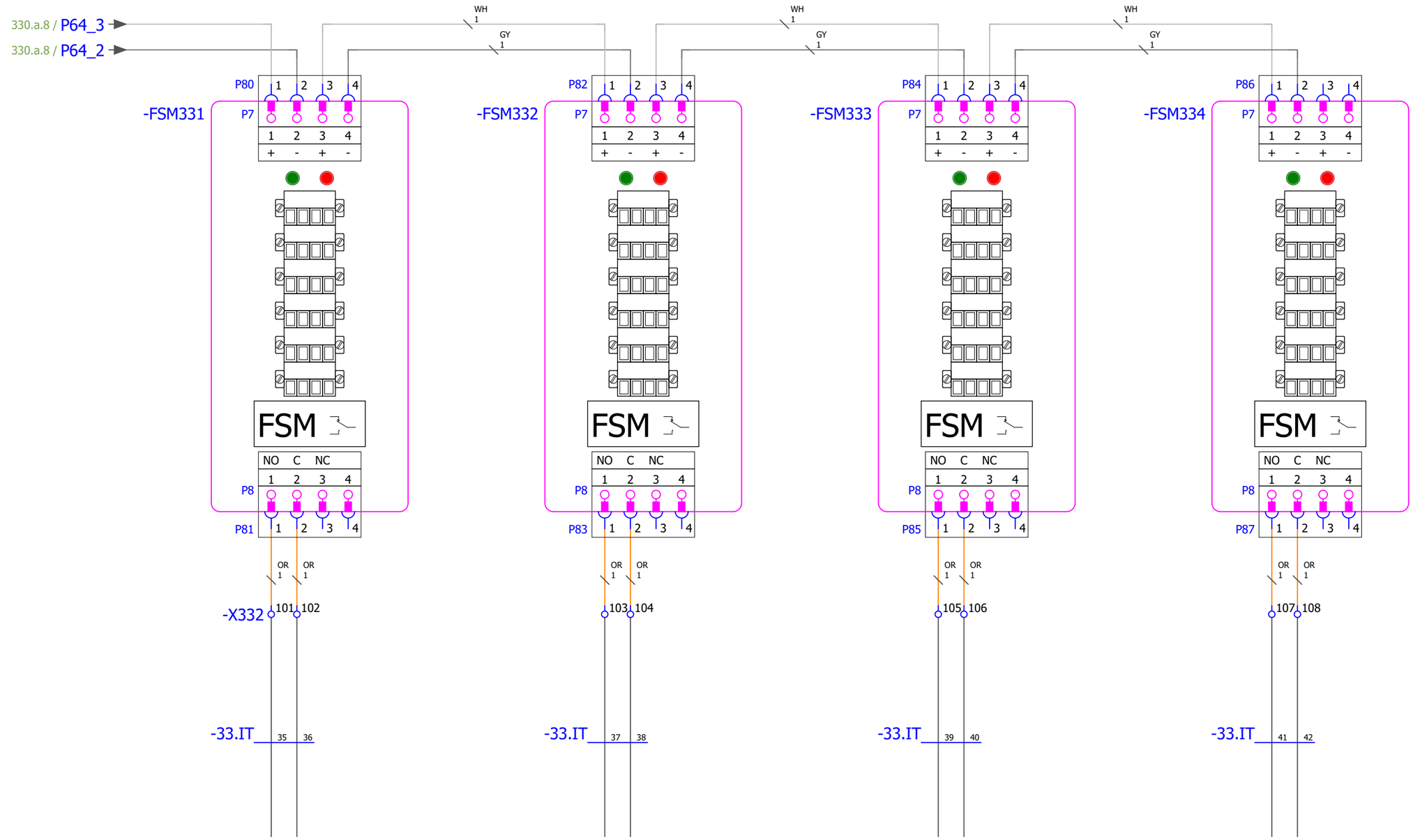

Fike Europe E.v.b.a. · Toekomstlaan 52 · B2200 Herentals · Belgium
Tel. +32 14 210031 · Fax +32 14 210743
Email: fike-europe@fike.com · website: www.fike.be

Don Valley Engineering
160737
160737-3-3

Fike Simulator Module

File:	Drawingnr:	Revision:	Dwg. By:
160737-3-3	160737-3-3	-	Stefaan.Jo
Date: 4/6/2022	Cabinet type: EPACO MULTI STREAM - 4 STREAMS		Page: 337 / # Pages: 84

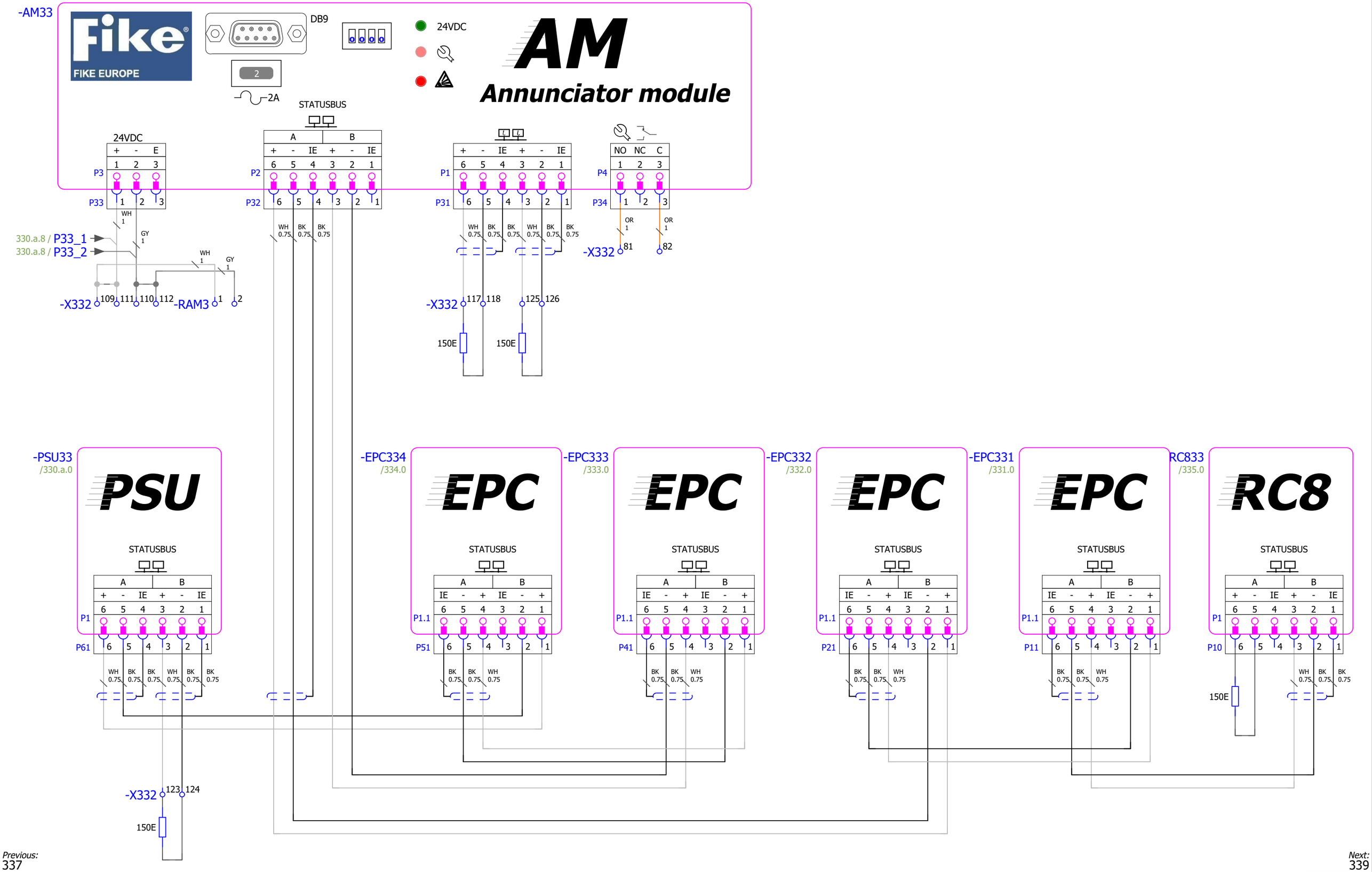

Previous:
337

Next:
339

Fike Europe E.v.b.a. · Toekomstlaan 52 · B2200 Herentals · Belgium
Tel. +32 14 210031 · Fax +32 14 210743
Email: fike-europe@fike.com · website: www.fike.be

Don Valley Engineering
160737
160737-3-3

Status Bus

File:	Drawingnr:	Revision:	Dwg. By:
160737-3-3	160737-3-3	-	Stefaan.Jo
Date: 4/6/2022	Cabinet type: EPACO MULTI STREAM - 4 STREAMS		Page: 338
			# Pages: 84

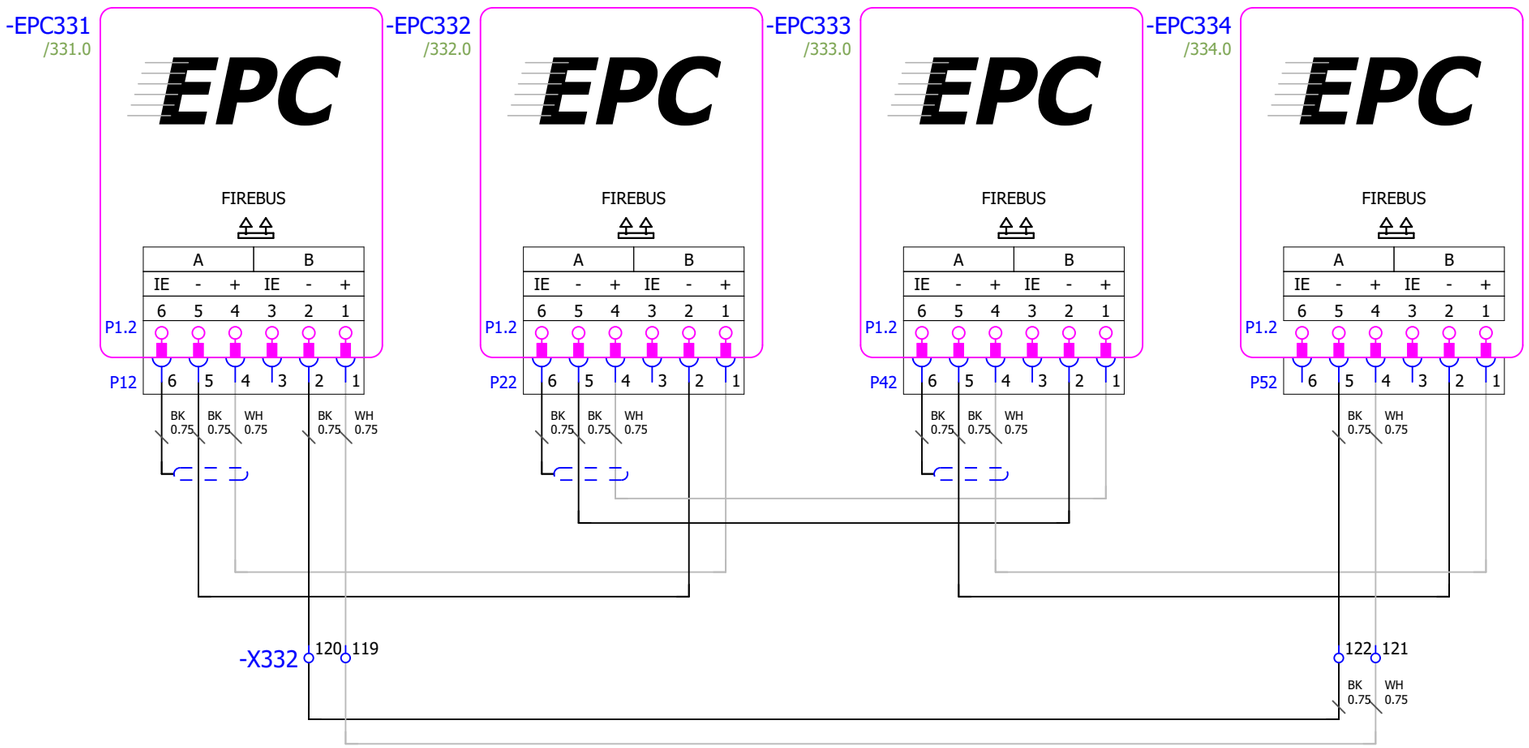

Previous:
338

Next:
+STREAM4/340.a

Fike
FIKE EUROPE
Fike Europe E.v.b.a. · Toekomstlaan 52 · B2200 Herentals · Belgium
Tel. +32 14 210031 · Fax +32 14 210743
Email: fike-europe@fike.com · website: www.fike.be

Don Valley Engineering
160737
160737-3-3

Fire Bus

File:	Drawingnr:	Revision:	Dwg. By:
160737-3-3	160737-3-3	-	Stefaan.Jo
Date: 4/6/2022	Cabinet type: EPACO MULTI STREAM - 4 STREAMS		Page: 339
			# Pages: 84

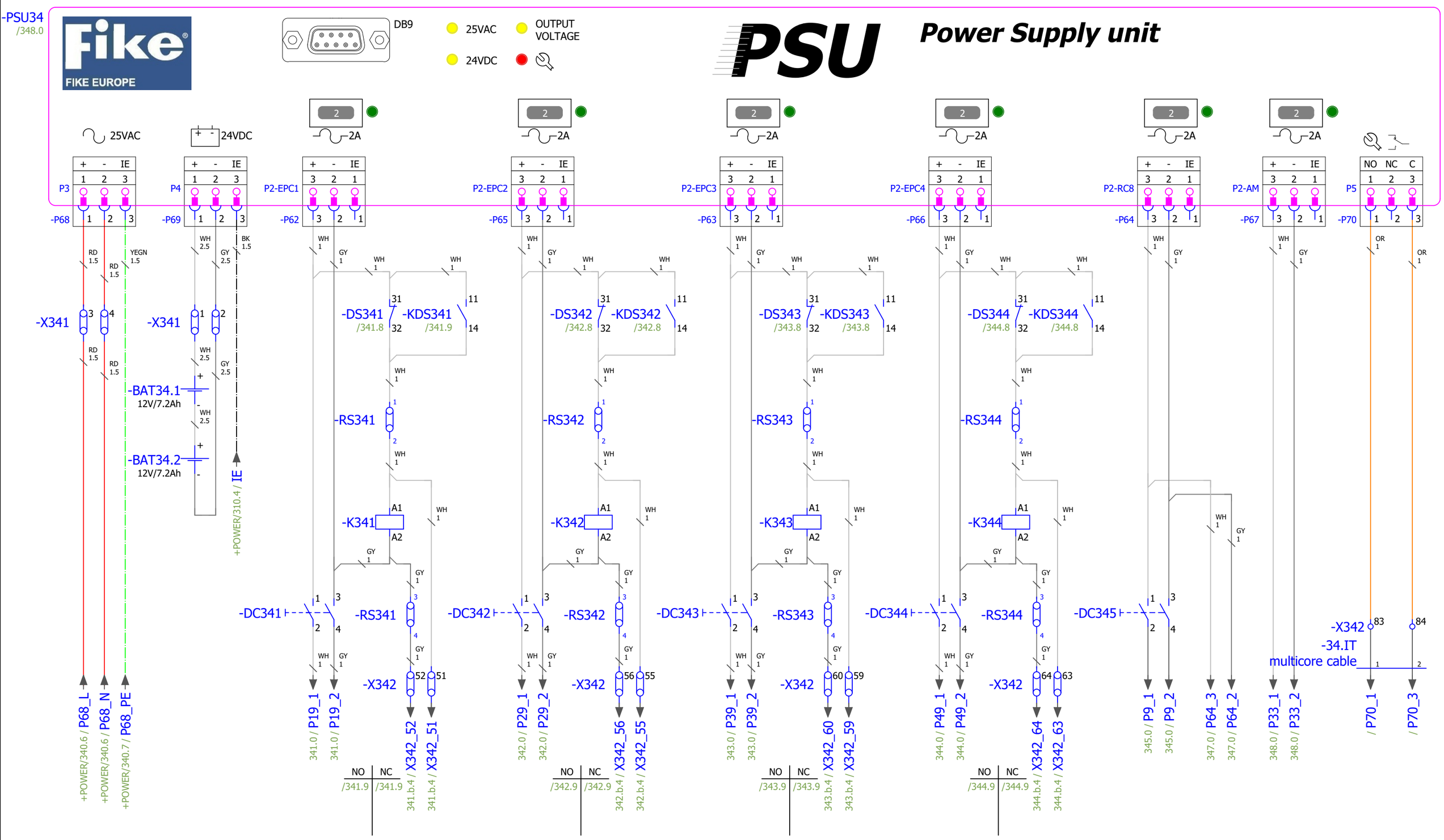

Previous:
+STREAM3/339

Next:
341

Fike Europe E.v.b.a. · Toekomstlaan 52 · B2200 Herentals · Belgium
Tel. +32 14 210031 · Fax +32 14 210743
Email: fike-europe@fike.com · website: www.fike.be

Don Valley Engineering
160737
160737-3-3

Power Supply Unit 1

File:	Drawingnr:	Revision:	Dwg. By:
160737-3-3	160737-3-3	-	Stefaan.Jo
Date: 4/6/2022	Cabinet type: EPACO MULTI STREAM - 4 STREAMS		Page: 340.a
			# Pages: 84

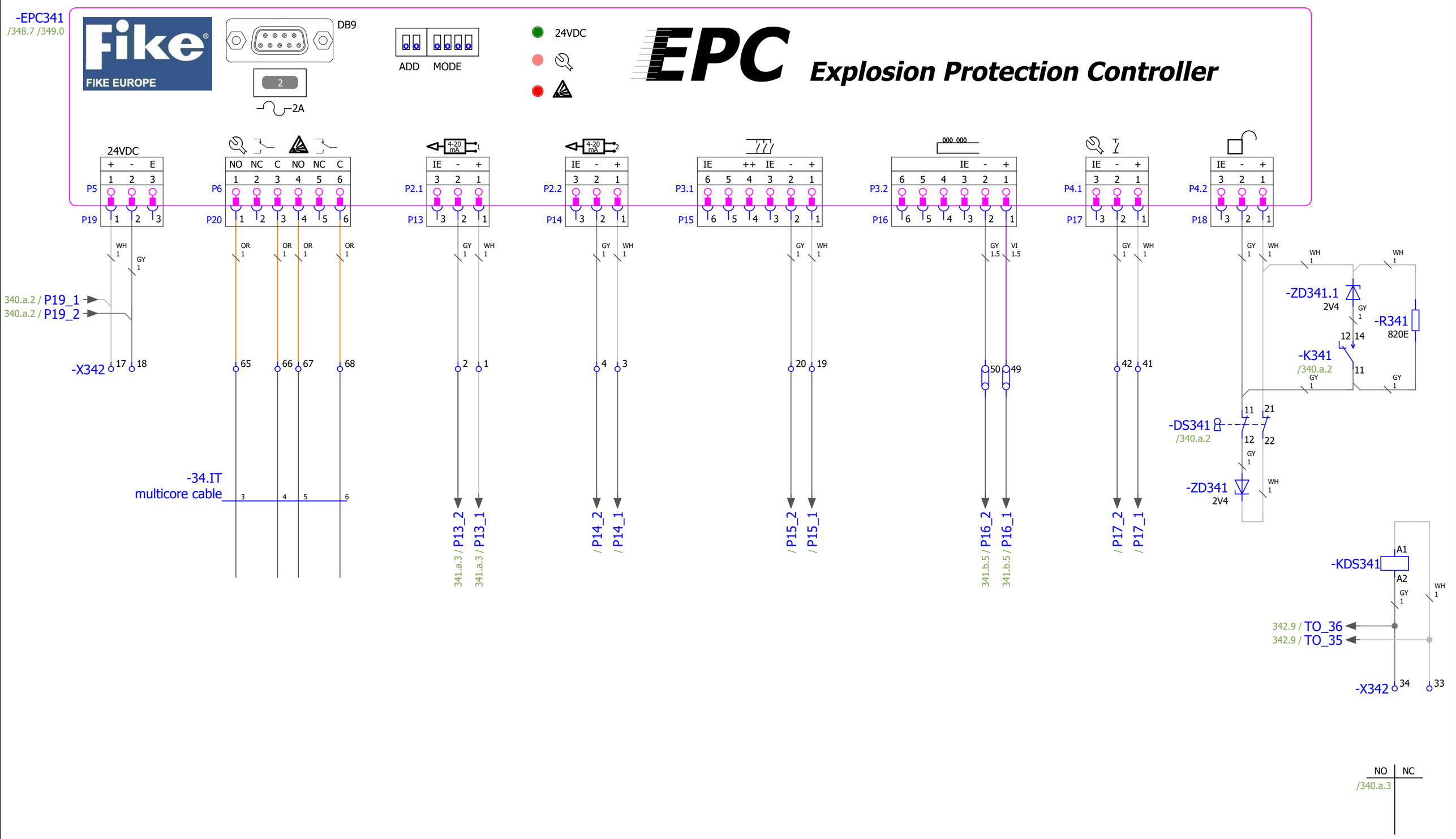

Previous:
340.a

Next:
341.a

Fike Europe E.v.b.a. · Toekomstlaan 52 · B2200 Herentals · Belgium
Tel. +32 14 210031 · Fax +32 14 210743
Email: fike-europe@fike.com · website: www.fike.be

Don Valley Engineering
160737
160737-3-3

Explosion Protection Controller 1

File:	Drawingnr:	Revision:	Dwg. By:
160737-3-3	160737-3-3	-	Stefaan.Jo
Date: 4/6/2022	Cabinet type: EPACO MULTI STREAM - 4 STREAMS		Page: 341 / # Pages: 84

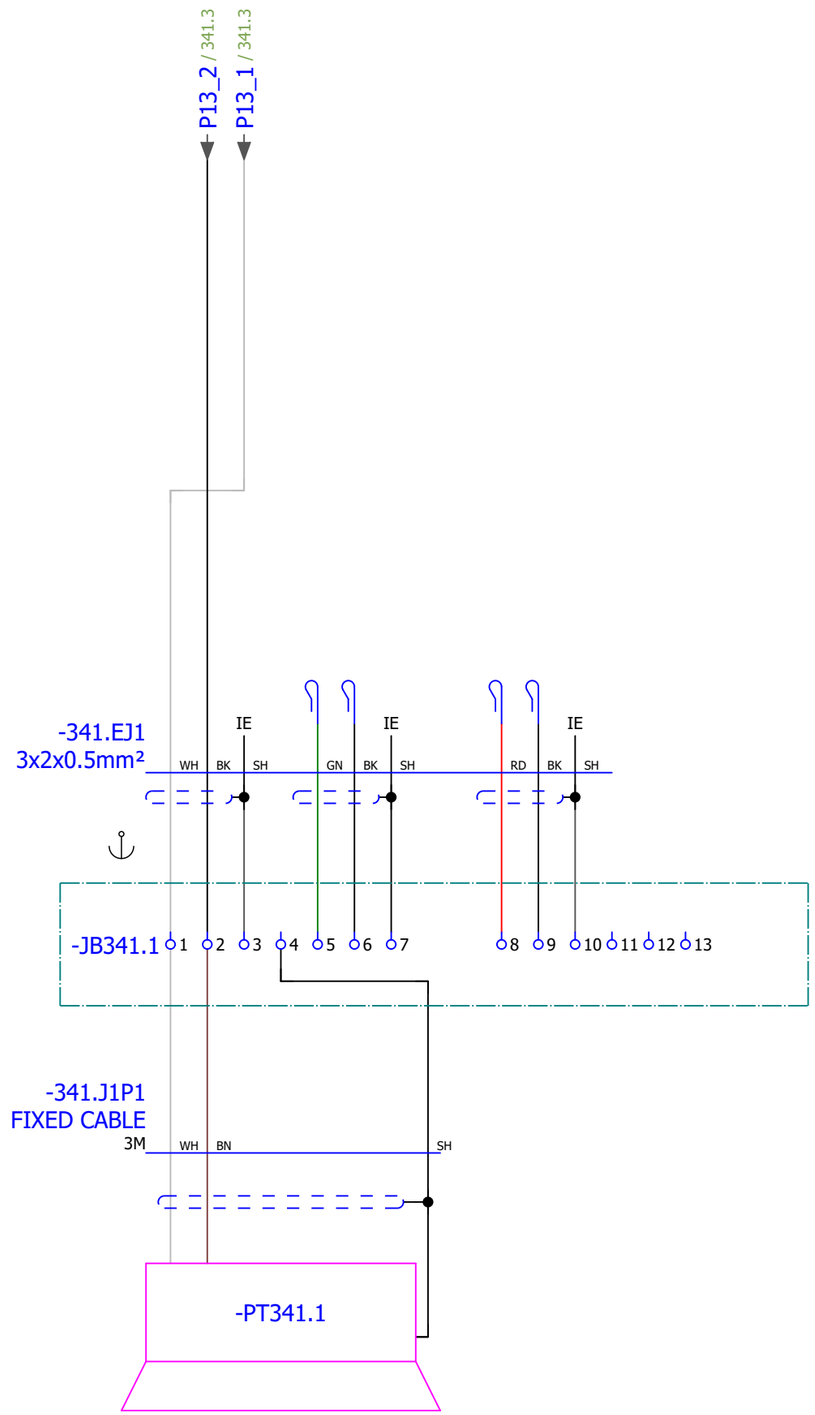

ATTENTION: Do not cut the breather tube from the detector(s) in the junction box

Previous:
341

Next:
341.b

Fike Europe E.v.b.a. · Toekomstlaan 52 · B2200 Herentals · Belgium
Tel. +32 14 210031 · Fax +32 14 210743
Email: fike-europe@fike.com · website: www.fike .be

Don Valley Engineering 160737 160737-3-3	Explosion Protection Controller 1	File: 160737-3-3	Drawingnr: 160737-3-3	Revision: -	Dwg. By: Stefaan.Jo
		Date: 4/6/2022	Cabinet type: EPACO MULTI STREAM - 4 STREAMS		Page: 341.a # Pages: 84

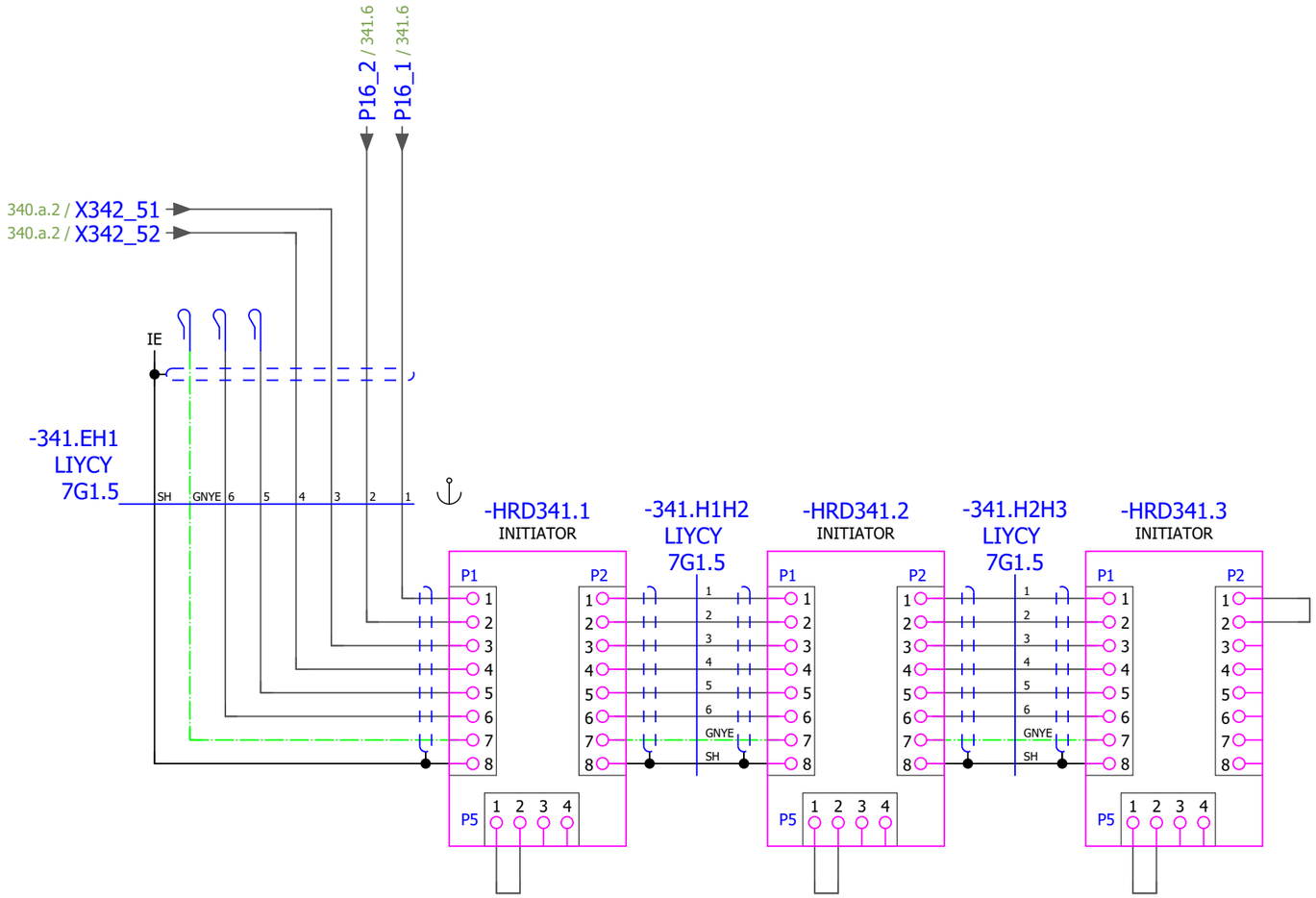

Previous:
341.a

Next:
342

Fike
FIKE EUROPE
Fike Europe E.v.b.a. · Toekomstlaan 52 · B2200 Herentals · Belgium
Tel. +32 14 210031 · Fax +32 14 210743
Email: fike-europe@fike.com · website: www.fike .be

Don Valley Engineering
160737
160737-3-3

Explosion Protection Controller 1

File:	Drawingnr:	Revision:	Dwg. By:
160737-3-3	160737-3-3	-	Stefaan.Jo
Date: 4/6/2022	Cabinet type: EPACO MULTI STREAM - 4 STREAMS		Page: 341.b
			# Pages: 84

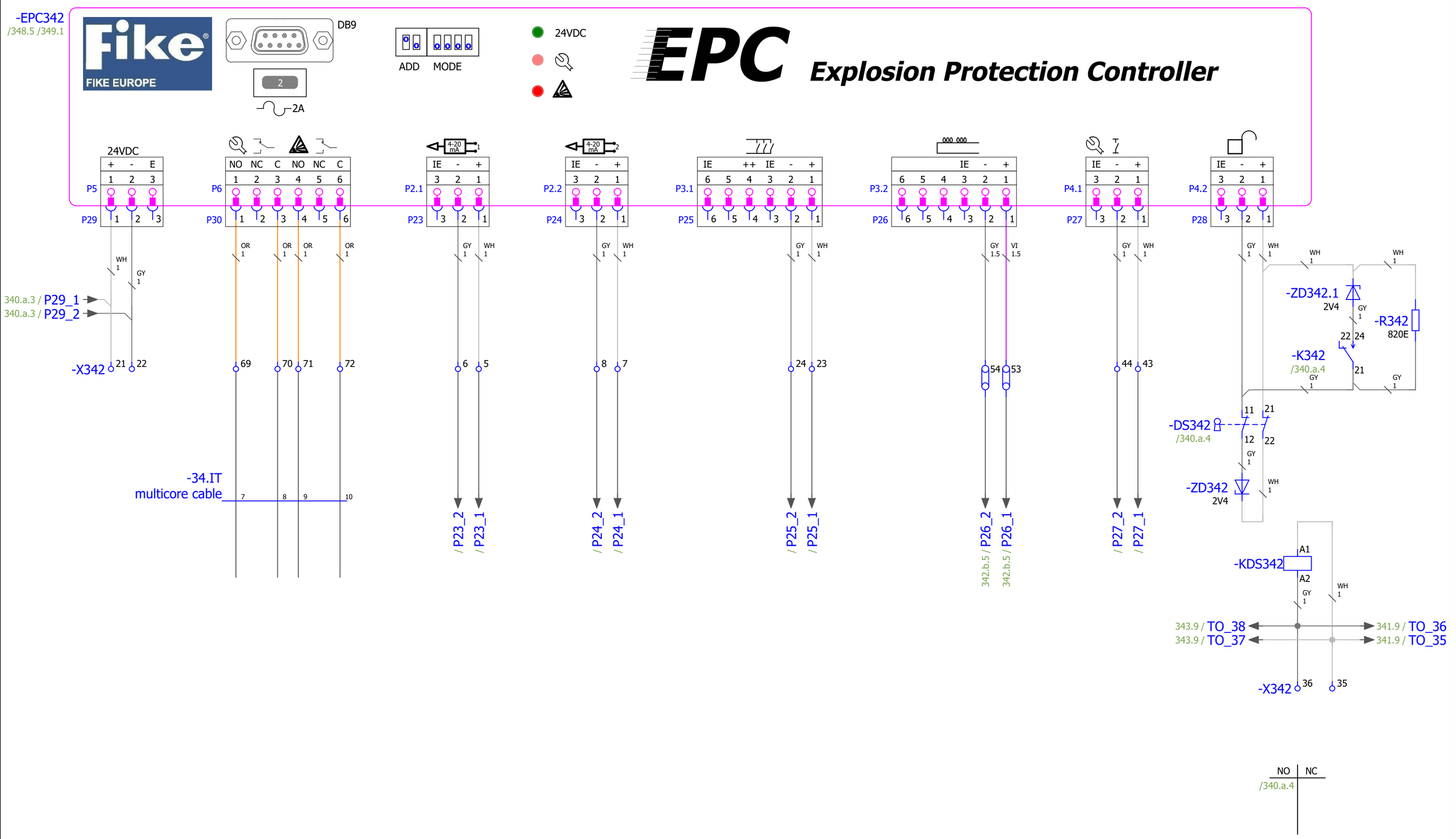

Previous: 341.b

Next: 342.b

Fike Europe E.v.b.a. · Toekomstlaan 52 · B2200 Herentals · Belgium
Tel. +32 14 210031 · Fax +32 14 210743
Email: fike-europe@fike.com · website: www.fike.be

Don Valley Engineering
160737
160737-3-3

Explosion Protection Controller 2

File:	Drawingnr:	Revision:	Dwg. By:
160737-3-3	160737-3-3	-	Stefaan.Jo
Date: 4/6/2022	Cabinet type: EPACO MULTI STREAM - 4 STREAMS		Page: 342 / # Pages: 84

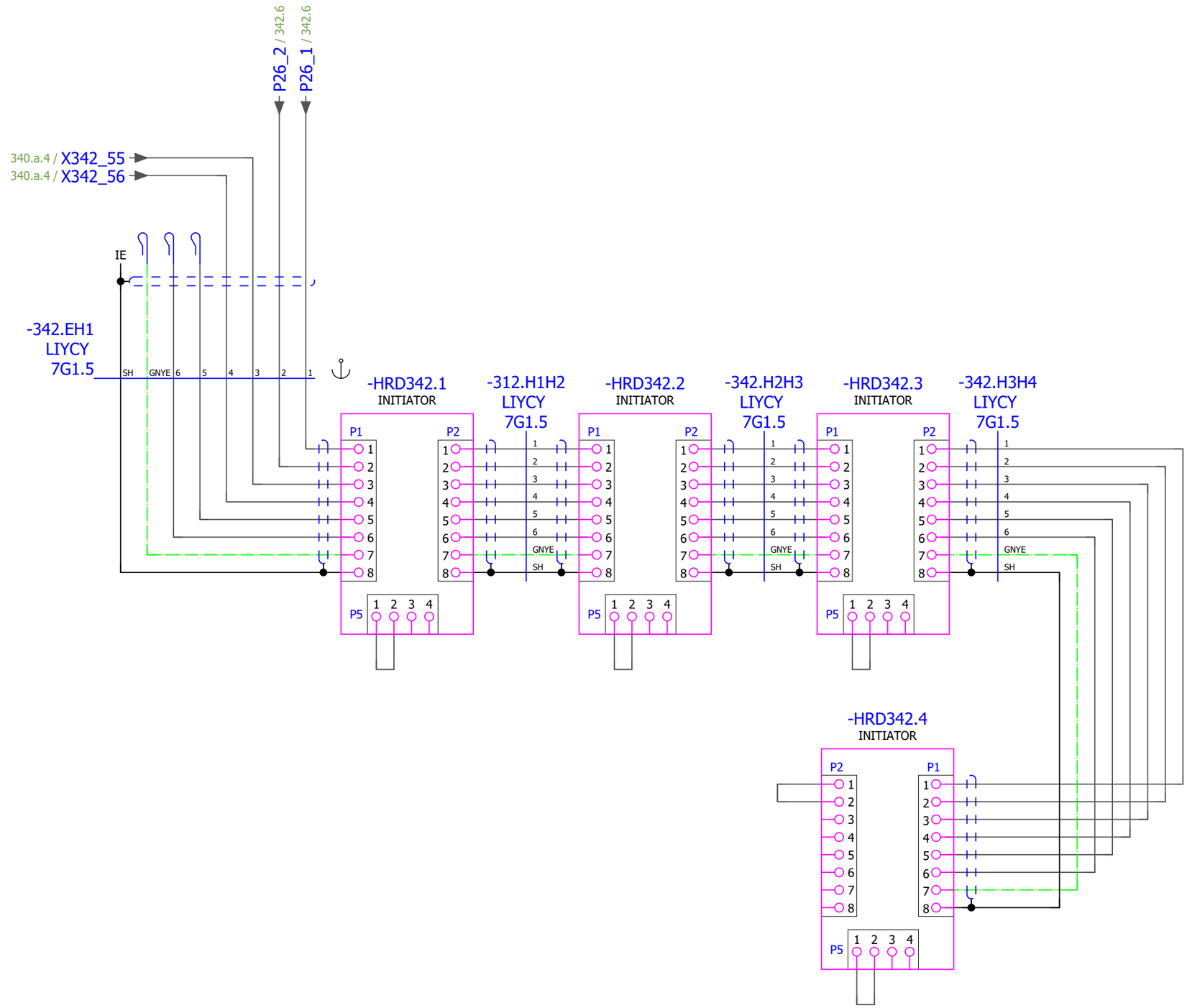

Previous:
342

Next:
343

Fike
FIKE EUROPE
Fike Europe E.v.b.a. · Toekomstlaan 52 · B2200 Herentals · Belgium
Tel.: +32 14 210031 · Fax +32 14 210743
Email: fike-europe@fike.com · website: www.fike.be

Don Valley Engineering
160737
160737-3-3

Explosion Protection Controller 2

File:	Drawingnr:	Revision:	Dwg. By:
160737-3-3	160737-3-3	-	Stefaan.Jo
Date: 4/6/2022	Cabinet type: EPACO MULTI STREAM - 4 STREAMS		Page: 342.b
			# Pages: 84

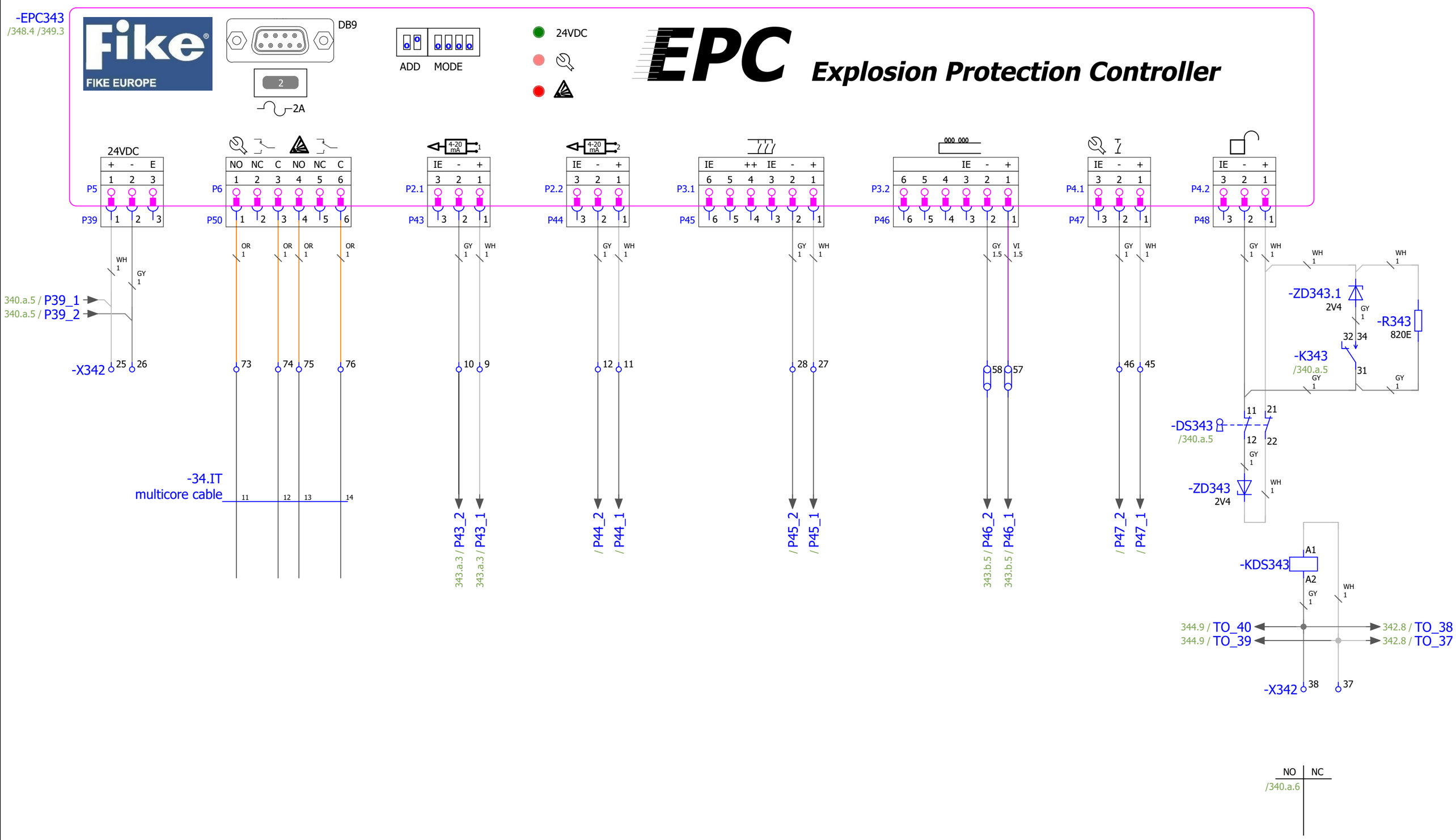

Previous:
342.b

Next:
343.a

Fike Europe E.v.b.a. · Toekomstlaan 52 · B2200 Herentals · Belgium
Tel. +32 14 210031 · Fax +32 14 210743
Email: fike-europe@fike.com · website: www.fike.be

Don Valley Engineering
160737
160737-3-3

Explosion Protection Controller 3

File:	Drawingnr:	Revision:	Dwg. By:
160737-3-3	160737-3-3	-	Stefaan.Jo
Date: 4/6/2022	Cabinet type: EPACO MULTI STREAM - 4 STREAMS		Page: 343 / # Pages: 84

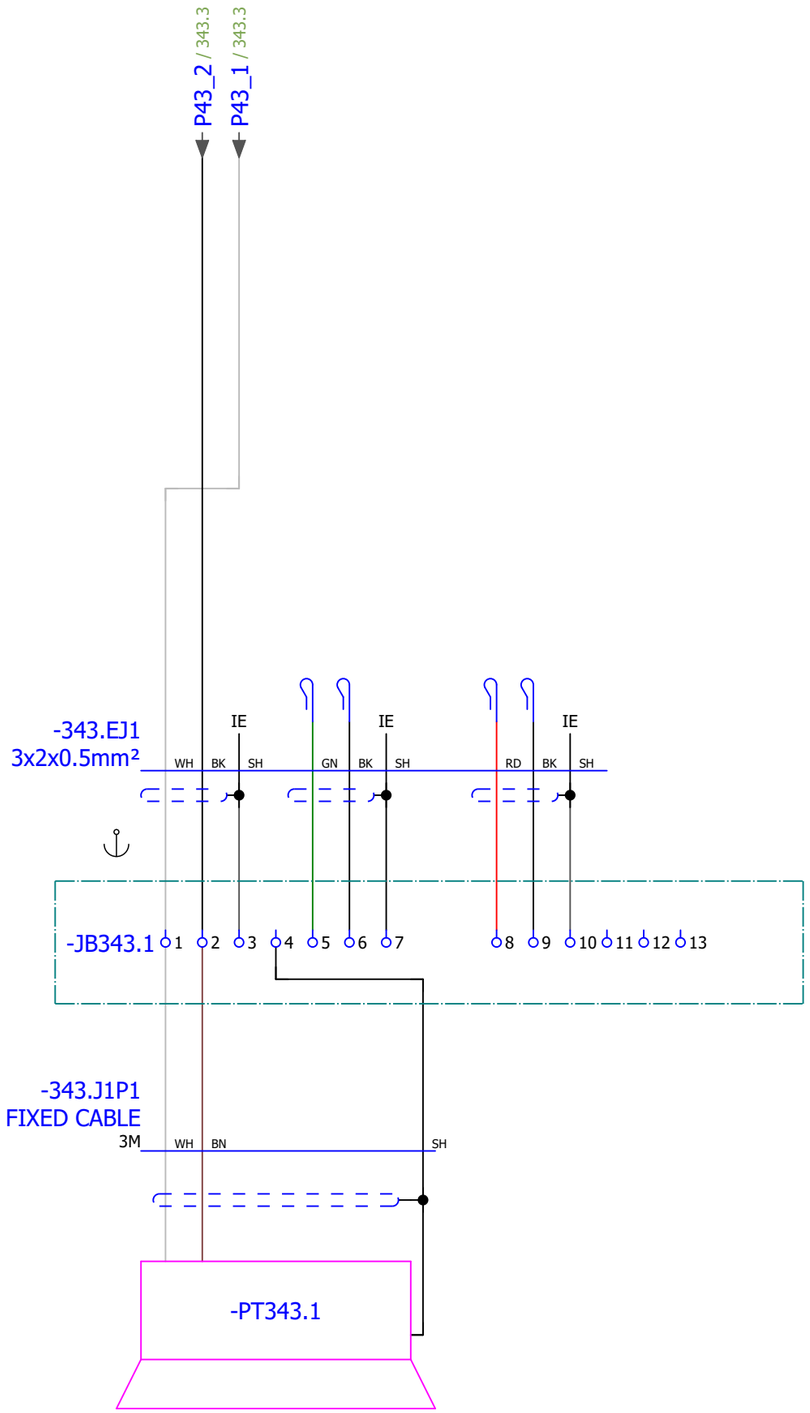

ATTENTION: Do not cut the breather tube from the detector(s) in the junction box

Previous:
343

Next:
343.b

Fike Europe E.v.b.a. · Toekomstlaan 52 · B2200 Herentals · Belgium
Tel. +32 14 210031 · Fax +32 14 210743
Email: fike-europe@fike.com · website: www.fike .be

Don Valley Engineering 160737 160737-3-3	Explosion Protection Controller 3	File: 160737-3-3	Drawingnr: 160737-3-3	Revision: -	Dwg. By: Stefaan.Jo
		Date: 4/6/2022	Cabinet type: EPACO MULTI STREAM - 4 STREAMS		Page: 343.a # Pages: 84

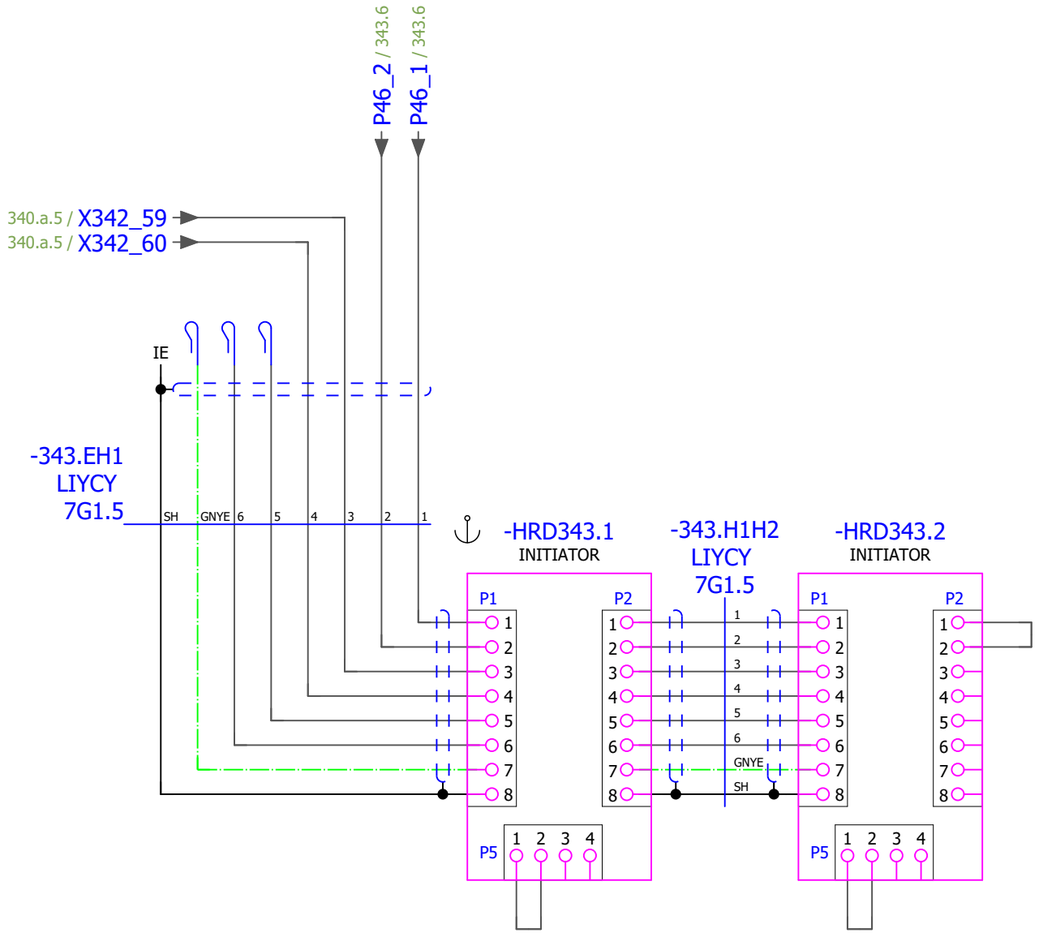

Previous:
343.a

Next:
344

Fike
FIKE EUROPE
Fike Europe E.v.b.a. · Toekomstlaan 52 · B2200 Herentals · Belgium
Tel. +32 14 210031 · Fax +32 14 210743
Email: fike-europe@fike.com · website: www.fike .be

Don Valley Engineering
160737
160737-3-3

Explosion Protection Controller 3

File:	Drawingnr:	Revision:	Dwg. By:
160737-3-3	160737-3-3	-	Stefaan.Jo
Date: 4/6/2022	Cabinet type: EPACO MULTI STREAM - 4 STREAMS		Page: 343.b
			# Pages: 84

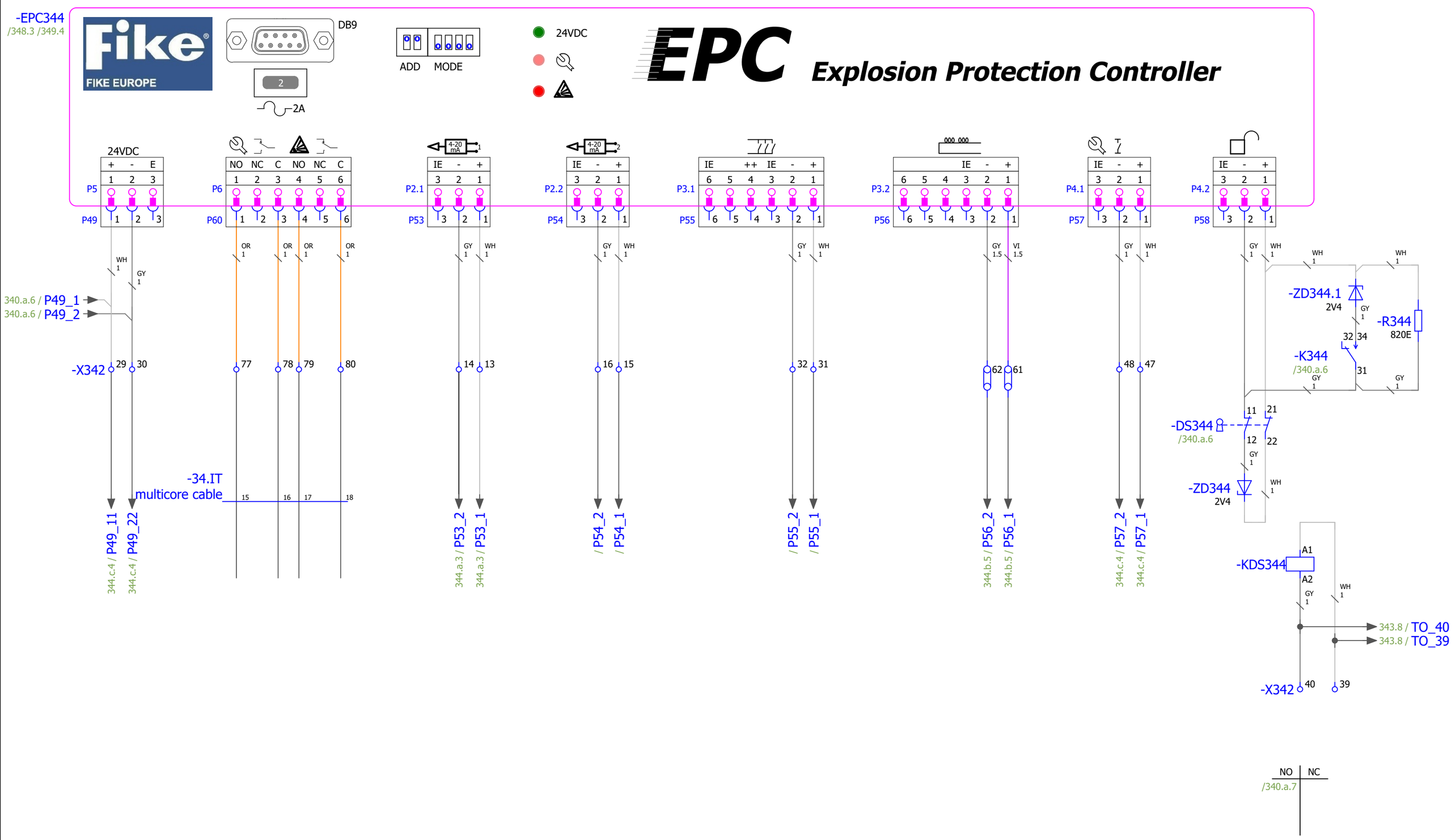

Previous:
343.b

Next:
344.a

Fike Europe E.v.b.a. · Toekomstlaan 52 · B2200 Herentals · Belgium
Tel. +32 14 210031 · Fax +32 14 210743
Email: fike-europe@fike.com · website: www.fike.be

Don Valley Engineering
160737
160737-3-3

Explosion Protection Controller 4

File:	Drawingnr:	Revision:	Dwg. By:
160737-3-3	160737-3-3	-	Stefaan.Jo
Date: 4/6/2022	Cabinet type: EPACO MULTI STREAM - 4 STREAMS		Page: 344 / # Pages: 84

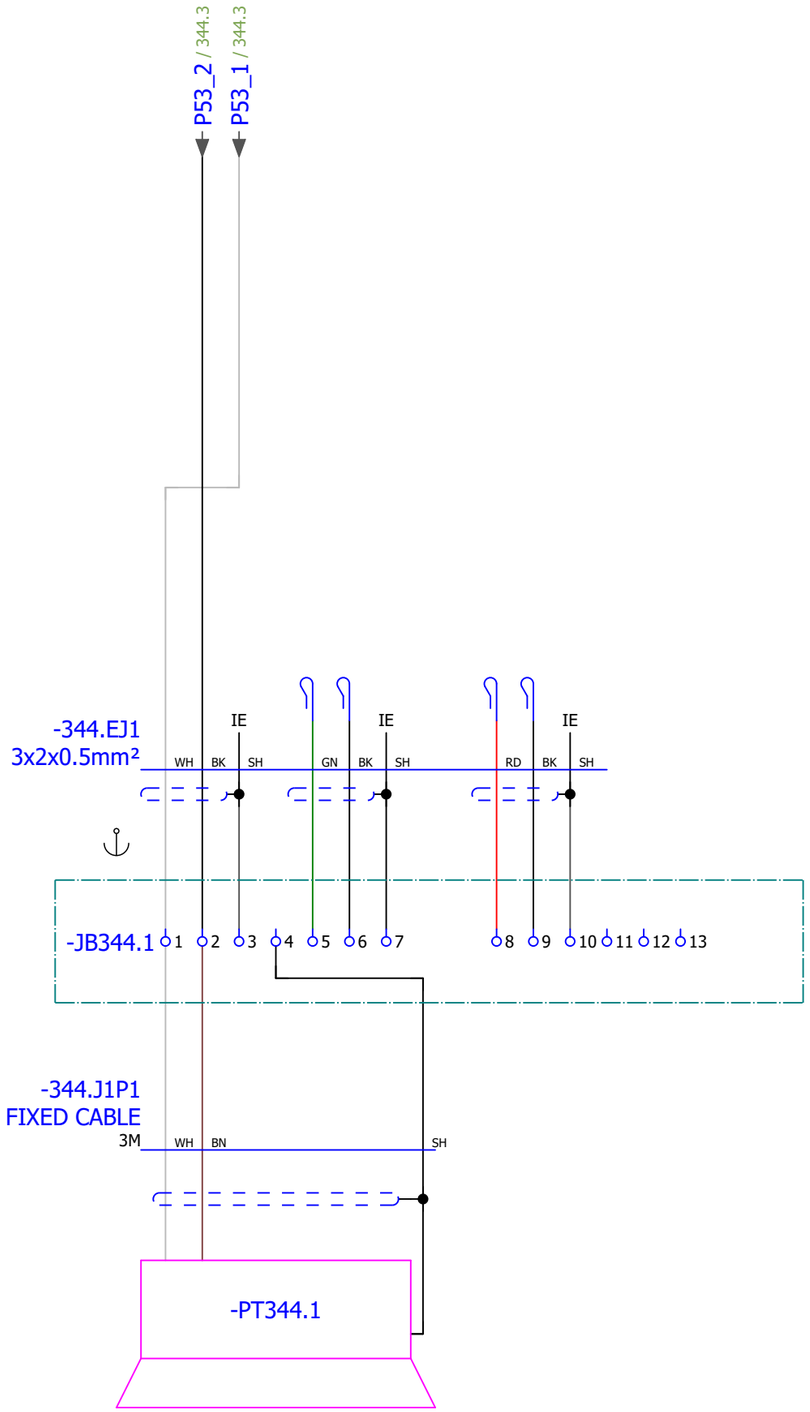

ATTENTION: Do not cut the breather tube from the detector(s) in the junction box

Previous:
344

Next:
344.b

Fike Europe E.v.b.a. · Toekomstlaan 52 · B2200 Herentals · Belgium
Tel. +32 14 210031 · Fax +32 14 210743
Email: fike-europe@fike.com · website: www.fike .be

Don Valley Engineering
160737
160737-3-3

Explosion Protection Controller 4

File:	Drawingnr:	Revision:	Dwg. By:
160737-3-3	160737-3-3	-	Stefaan.Jo
Date: 4/6/2022	Cabinet type: EPACO MULTI STREAM - 4 STREAMS		Page: 344.a
			# Pages: 84

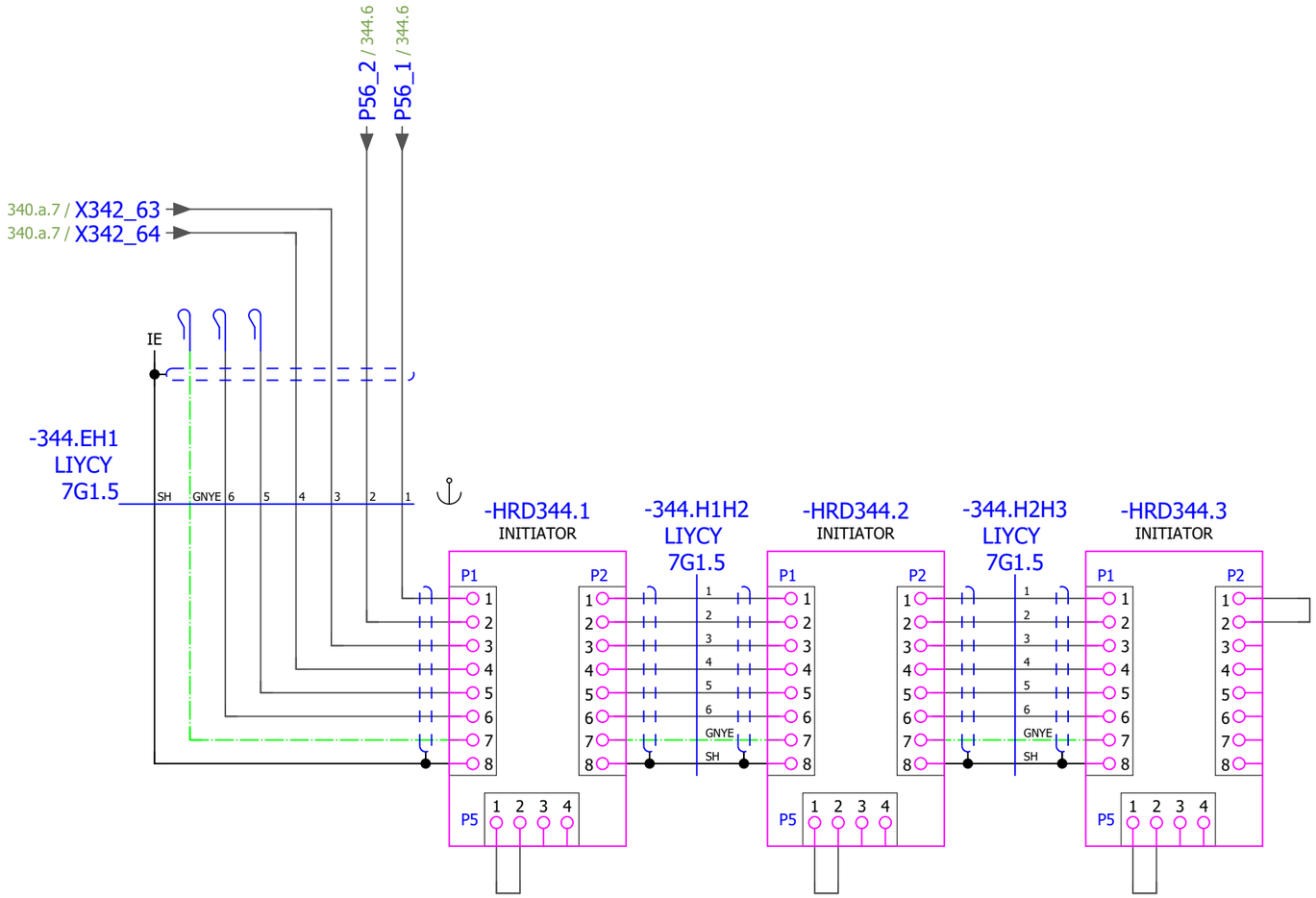

Previous:
344.a

Next:
344.c

Fike
FIKE EUROPE
Fike Europe E.v.b.a. · Toekomstlaan 52 · B2200 Herentals · Belgium
Tel. +32 14 210031 · Fax +32 14 210743
Email: fike-europe@fike.com · website: www.fike .be

Don Valley Engineering
160737
160737-3-3

Explosion Protection Controller 4

File:	Drawingnr:	Revision:	Dwg. By:
160737-3-3	160737-3-3	-	Stefaan.Jo
Date: 4/6/2022	Cabinet type: EPACO MULTI STREAM - 4 STREAMS		Page: 344.b
			# Pages: 84

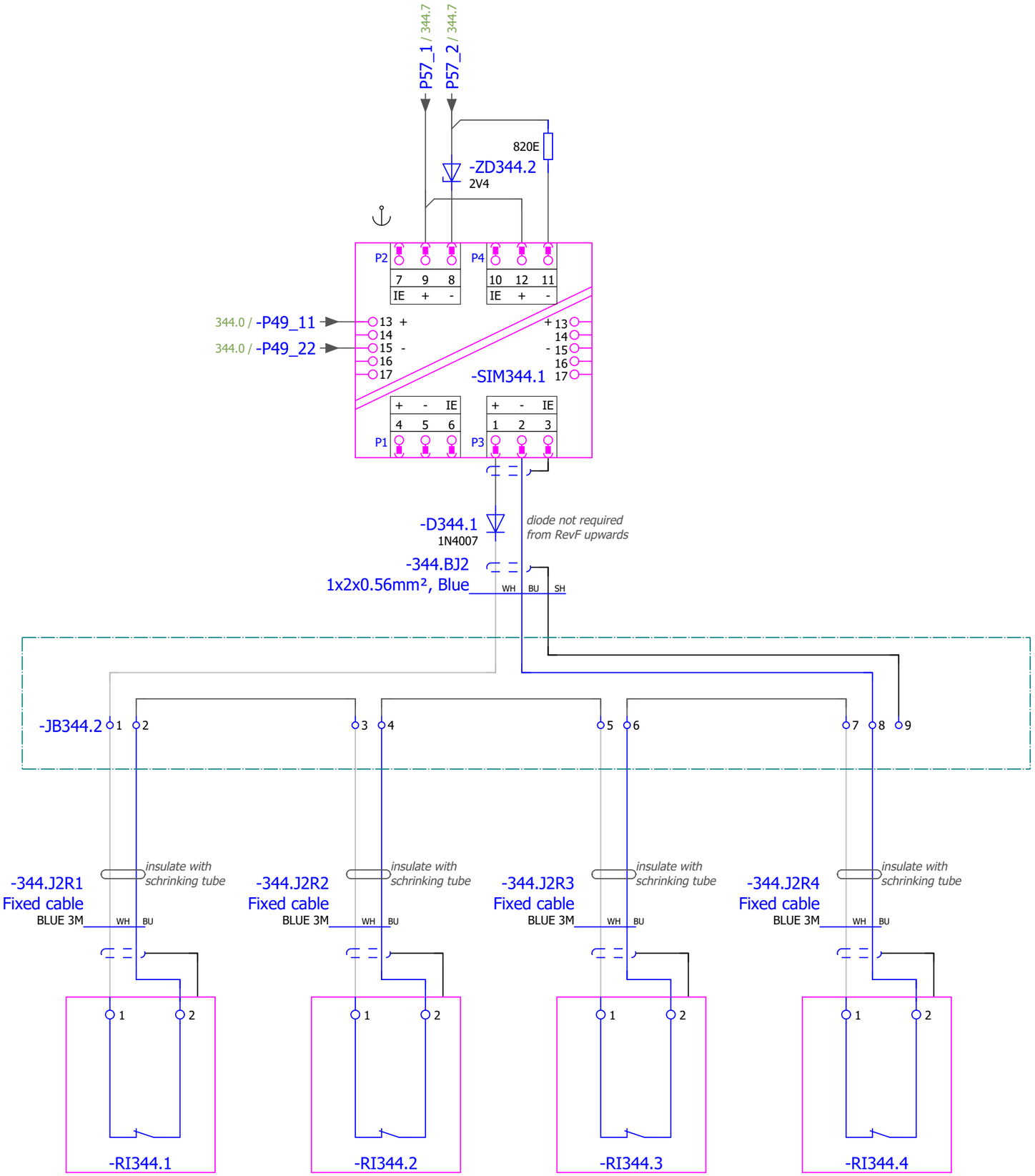

Previous:
344.b

Next:
345

Fike
FIKE EUROPE
Fike Europe E.v.b.a. · Toekomstlaan 52 · B2200 Herentals · Belgium
Tel. +32 14 210031 · Fax +32 14 210743
Email: fike-europe@fike.com · website: www.fike.be

Don Valley Engineering
160737
160737-3-3

Explosion Protection Controller 4

File:	Drawingnr:	Revision:	Dwg. By:
160737-3-3	160737-3-3	-	Stefaan.Jo
Date: 4/6/2022	Cabinet type: EPACO MULTI STREAM - 4 STREAMS		Page: 344.c
			# Pages: 84

-RC834
/348.8

RC8 Relay Contact module

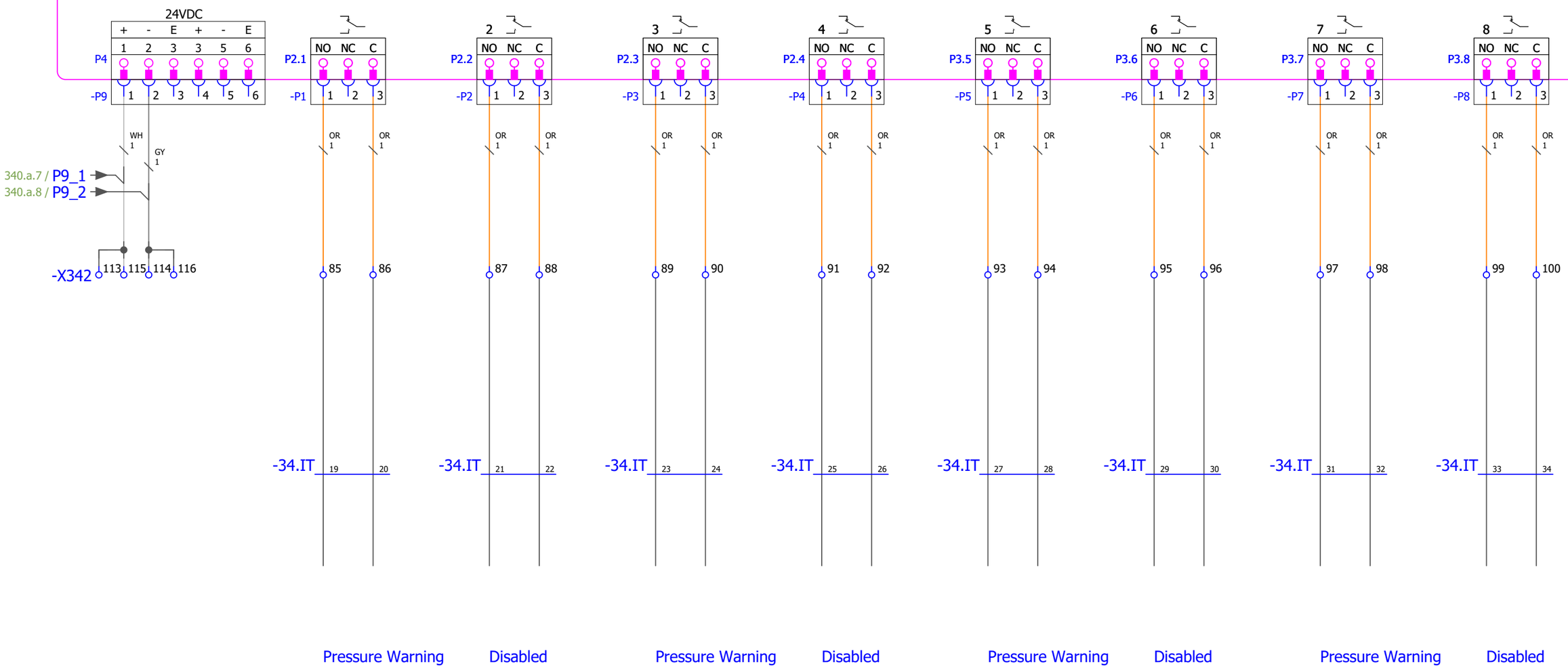

Previous: 344.c

Next: 347

Fike Europe E.v.b.a. · Toekomstlaan 52 · B2200 Herentals · Belgium
Tel. +32 14 210031 · Fax +32 14 210743
Email: fike-europe@fike.com · website: www.fike.be

Don Valley Engineering
160737
160737-3-3

RC8

File:	Drawingnr:	Revision:	Dwg. By:
160737-3-3	160737-3-3	-	Stefaan.Jo
Date: 4/6/2022	Cabinet type: EPACO MULTI STREAM - 4 STREAMS		Page: 345 / # Pages: 84

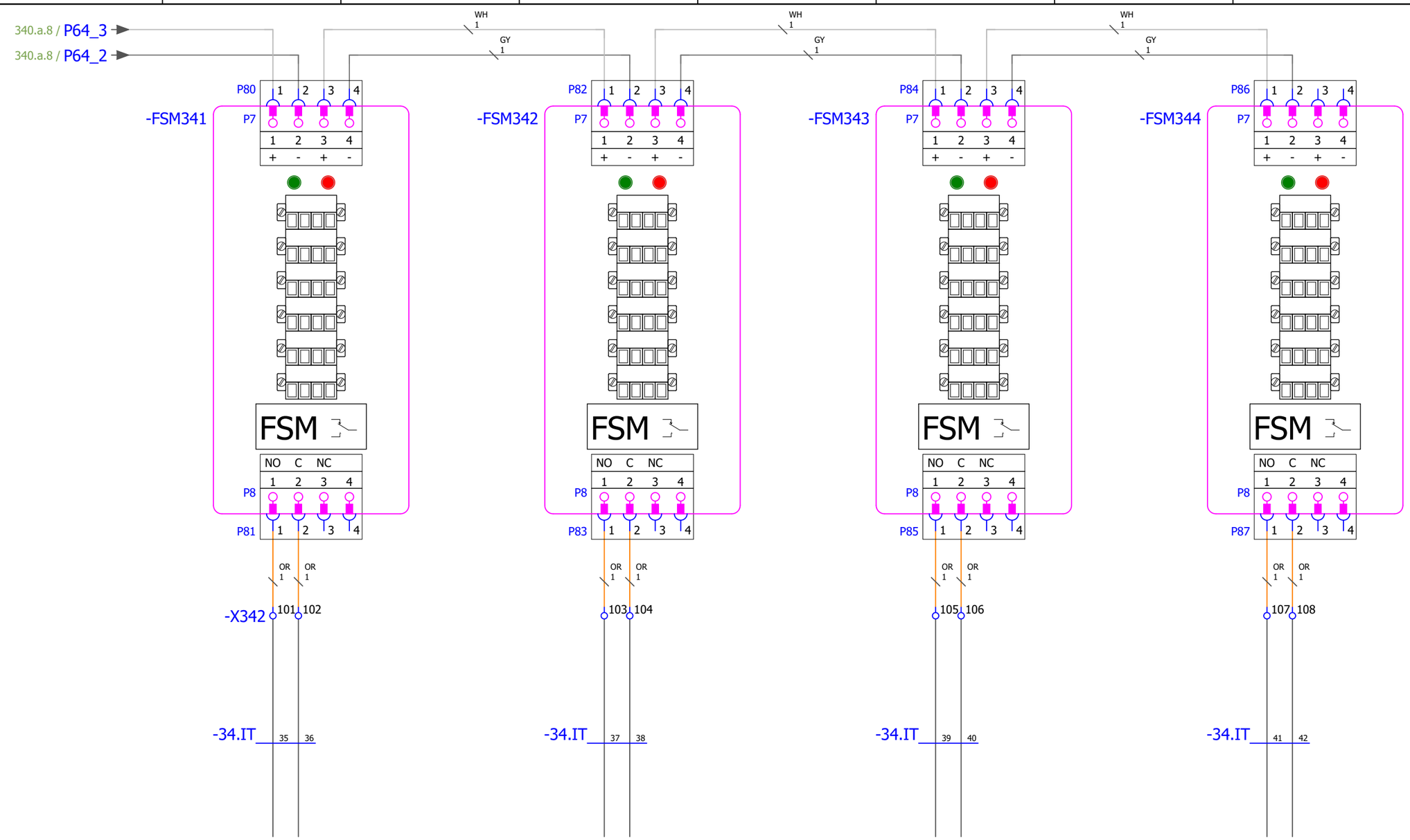

Previous: 345

Next: 348

Fike Europe E.v.b.a. · Toekomstlaan 52 · B2200 Herentals · Belgium
Tel. +32 14 210031 · Fax +32 14 210743
Email: fike-europe@fike.com · website: www.fike.be

Don Valley Engineering
160737
160737-3-3

Fike Simulator Module

File:	Drawingnr:	Revision:	Dwg. By:
160737-3-3	160737-3-3	-	Stefaan.Jo
Date: 4/6/2022	Cabinet type: EPACO MULTI STREAM - 4 STREAMS		Page: 347 / # Pages: 84

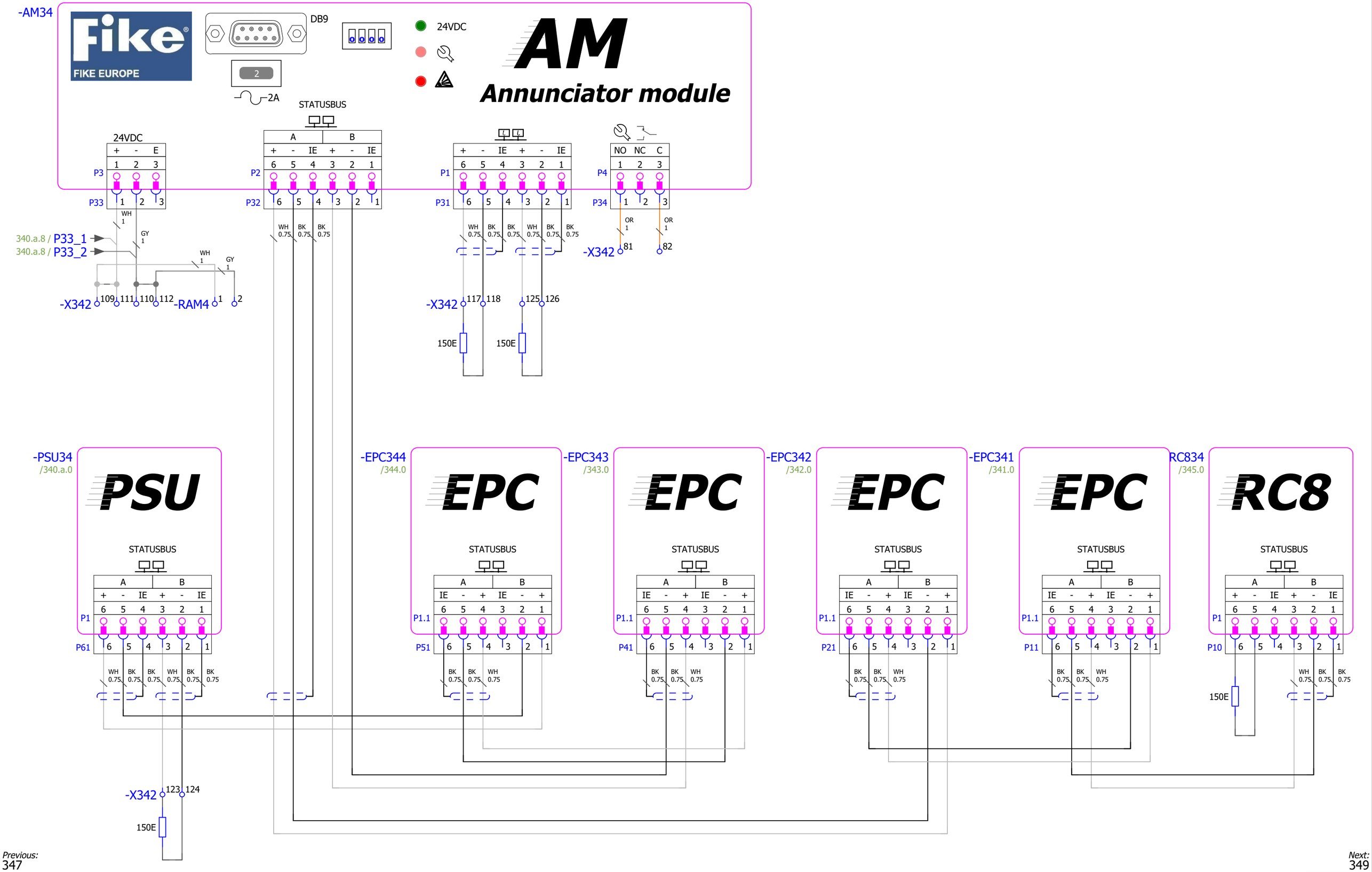

Fike Europe E.v.b.a. · Toekomstlaan 52 · B2200 Herentals · Belgium
Tel. +32 14 210031 · Fax +32 14 210743
Email: fike-europe@fike.com · website: www.fike.be

Don Valley Engineering
160737
160737-3-3

Status Bus

File:	Drawingnr:	Revision:	Dwg. By:
160737-3-3	160737-3-3	-	Stefaan.Jo
Date: 4/6/2022	Cabinet type: EPACO MULTI STREAM - 4 STREAMS		Page: 348 / # Pages: 84

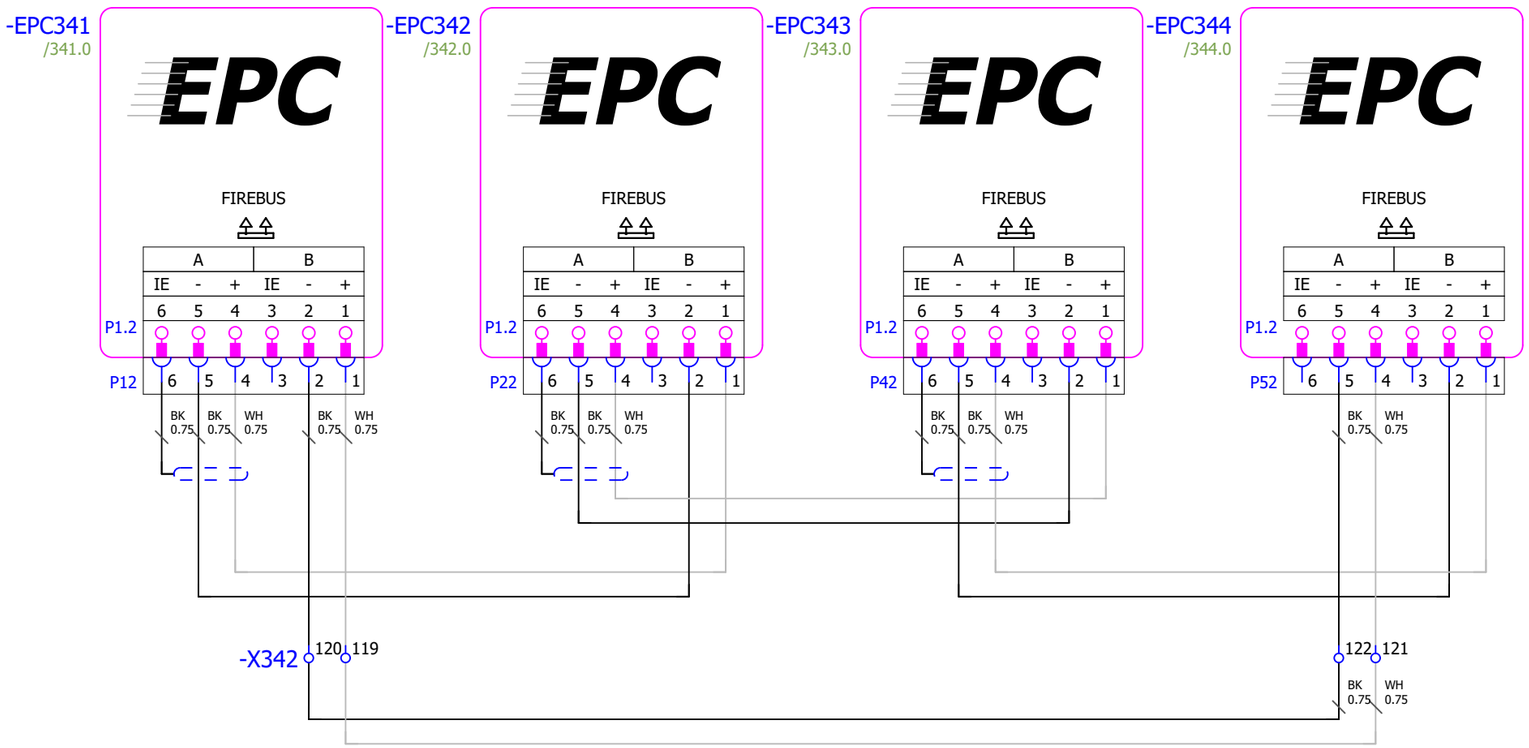

Previous:
348

Next:

Fike Europe E.v.b.a. · Toekomstlaan 52 · B2200 Herentals · Belgium
Tel. +32 14 210031 · Fax +32 14 210743
Email: fike-europe@fike.com · website: www.fike.be

Don Valley Engineering
160737
160737-3-3

Fire Bus

File:	Drawingnr:	Revision:	Dwg. By:
160737-3-3	160737-3-3	-	Stefaan.Jo
Date: 4/6/2022	Cabinet type: EPACO MULTI STREAM - 4 STREAMS		Page: 349 / # Pages: 84